WALL CONSTRUCTION TYPES

1. EXTERIOR DEMISING WALL: EXISTING WALL. PATCH AND REPAIR WALL AS REQUIRED. FINISH PER FINISH SCHEDULE, SHEET A4.
2. TENANT DEMISING WALL: EXISTING MASONRY WALL WITH METAL FURRING AND GWB. PATCH AND REPAIR AS REQUIRED. SEE DETAIL 2/A4 FOR ADDITIONAL REQUIREMENTS. FINISH PER FINISH SCHEDULE, SHEET A4.
3. PARTITION WALL: 6" (20 GA) METAL STUDS @ 16" OC WITH ONE LAYER 5/8" GWB EACH SIDE TO ROOF DECK. SEE DETAIL 1/A4 FOR ADDITIONAL REQUIREMENTS. FINISH PER FINISH SCHEDULE, SHEET A4.
4. PARTITION WALL: EXISTING METAL STUDS AND GWB TO ROOF DECK. PATCH AND REPAIR AS REQUIRED. FINISH PER FINISH SCHEDULE, SHEET A4.
5. PARTITION WALL: 3 5/8" (20 GAGE) METAL STUDS @ 16" OC WITH ONE LAYER 5/8" GWB EACH SIDE TO 8'-6" AFF. SEE DETAIL 3/A4. FINISH PER FINISH SCHEDULE SHEET A4.
6. PARTITION WALL: 3 5/8" (20 GAGE) METAL STUDS @ 16" OC WITH ONE LAYER 5/8" GWB TO 6" ABOVE FINISHED CEILING. FINISH PER FINISH SCHEDULE SHEET A4.
7. INFILL PARTITION 2 1/2" (20 GA) METAL STUDS @ 16" OC WITH ONE LAYER 5/8" GWB ON EXPOSED SIDE. MATCH EXIST ADJACENT SURFACES. FINISH PER FINISH SCHEDULE, SHEET A4.

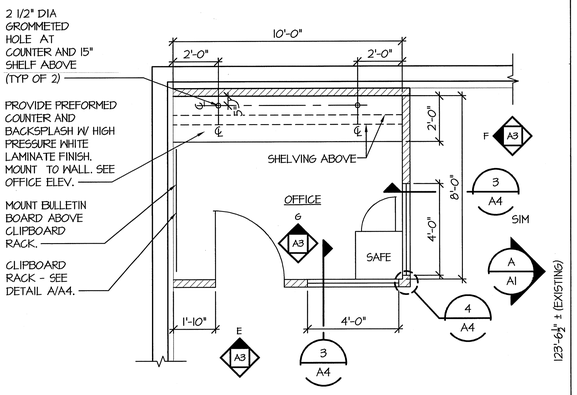

ENLARGED OFFICE PLAN

SCALE: 3/8" = 1'-0"

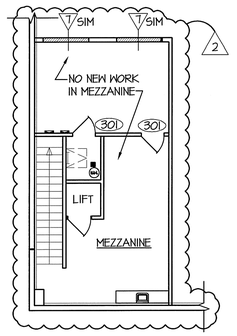

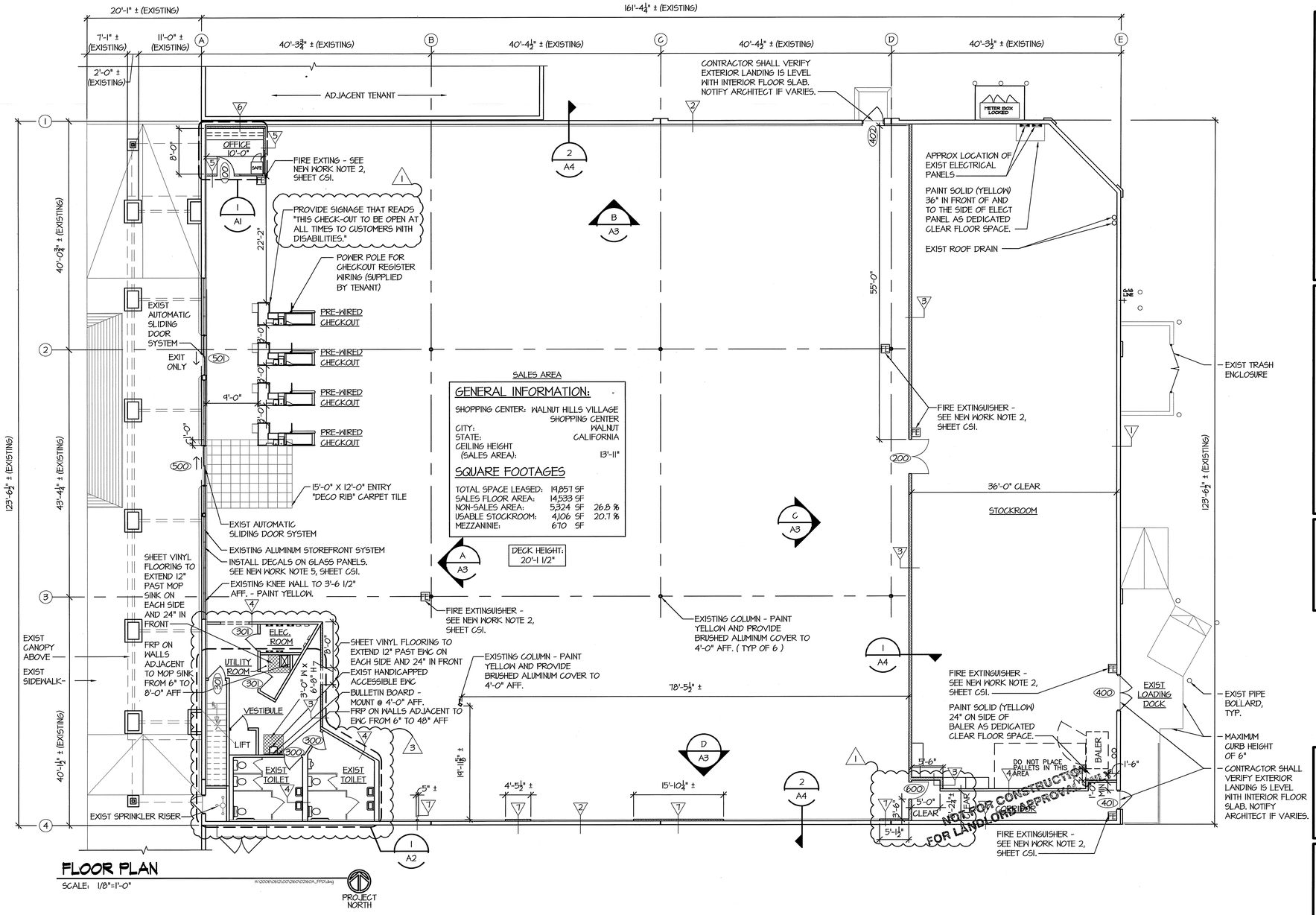

FLOOR PLAN

SCALE: 1/8"=1'-0"

PROJECT NORTH

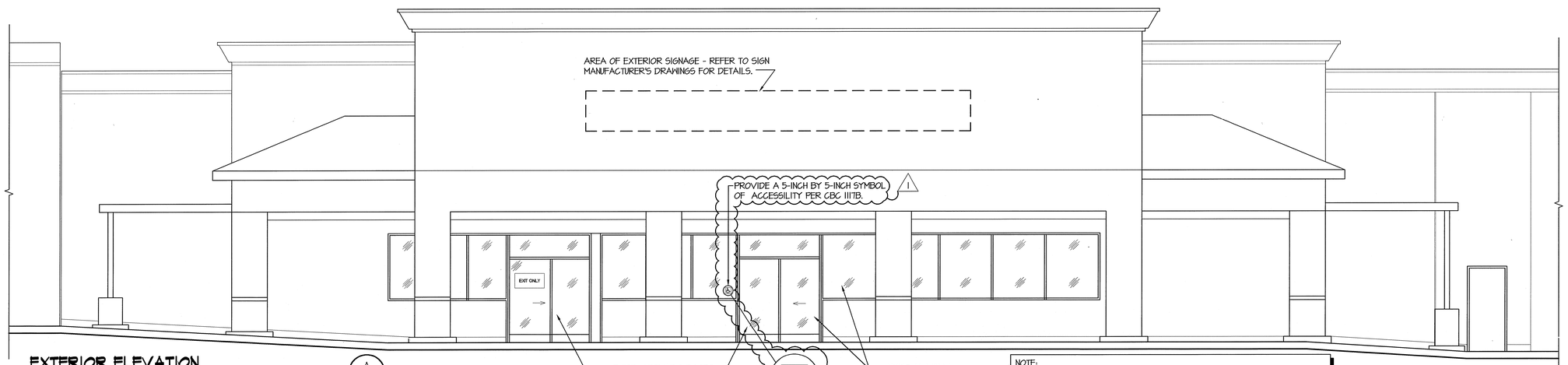

NOTE:
SIGNS, LOCATION, NUMBER AND SIZE ARE NOT APPROVED UNDER THIS BUILDING PERMIT. A SEPARATE SIGN LOCATION PERMIT IS REQUIRED FOR EACH SIGN.

EXTERIOR ELEVATION

SCALE: 1/4" = 1'-0"

mark	date	revisions	by	description
3	05/07/07		CDW	TENANT CHANGES
2	03/28/07		CDW	TENANT CHANGES
1	10/23/06		CDW	BLDG CODE COMMENTS

date	07/31/2006
project	0602-160
designed	CDW
drawn	CDW
checked	ATH

Cederquist Rodriguez Ripley PC
129 W Virginia Beach Blvd.
Norfolk, VA 23510
PH (757) 622-2828
FAX (757) 622-6883

project DOLLAR TREE
WALNUT HILLS VILLAGE DEAL #4567
WALNUT, CALIFORNIA

drawing FLOOR PLAN, WALL CONSTRUCTION TYPES, ENLARGED PLAN, AND ELEVATION

NOT FOR CONSTRUCTION FOR LANDLORD APPROVAL ONLY

sheet 2

A1

of 23