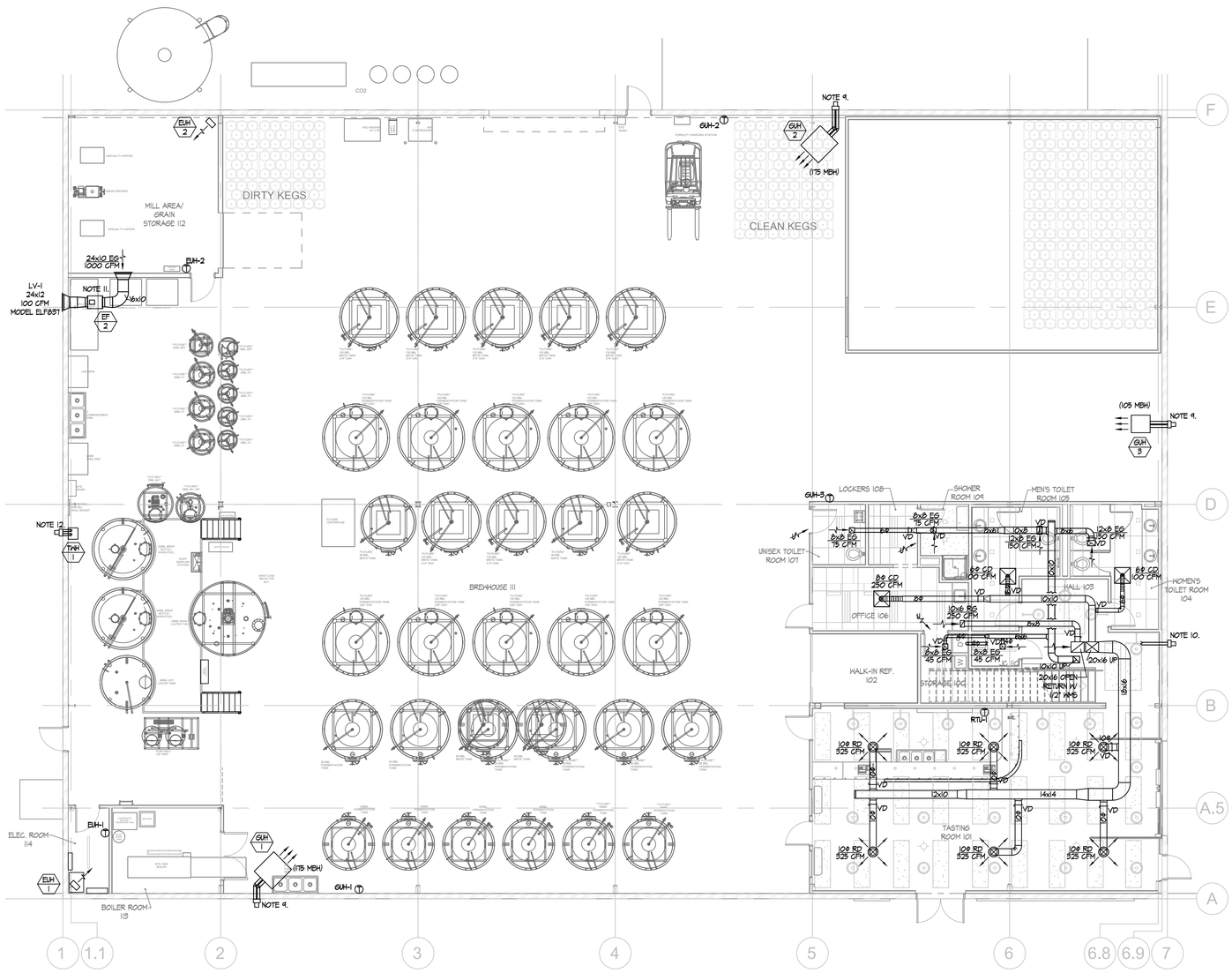

MAIN LEVEL MECHANICAL NEW WORK PLAN
SCALE: 1/8"=1'-0"

MECHANICAL NOTES:

1. ALL MECHANICAL WORK SHALL BE DONE IN ACCORDANCE WITH THE 2015 INTERNATIONAL MECHANICAL CODE, 2015 NATIONAL STANDARD PLUMBING CODE, 2015 INTERNATIONAL BUILDING CODE (NJ EDITION) AND THE 2015 INTERNATIONAL FIRE CODE.
2. MECHANICAL CONTRACTOR SHALL INSTALL DUCTWORK, PIPING, ETC TO MAINTAIN DEDICATED SPACE ABOVE ALL ELECTRICAL EQUIPMENT IN ACCORDANCE WITH NEC. COORDINATE INSTALLATION WITH ELECTRICAL CONTRACTOR.
3. THE MECHANICAL CONTRACTOR SHALL PROVIDE ALL DISCONNECT SWITCHES, MOTOR STARTERS, ETC. FOR MECHANICAL EQUIPMENT SUPPLIED.
4. MECHANICAL CONTRACTOR SHALL HAVE A CERTIFIED INDEPENDENT BALANCING CONTRACTOR BALANCE THE AIR SYSTEM TO THE QUANTITIES SHOWN. PROVIDE BALANCE REPORT TO OWNER, ARCHITECT & ENGINEER UPON COMPLETION.
5. MAXIMUM PERMISSABLE FLEX DUCT TO AIR OUTLET IS 6'-0".
6. ALL FLEX DUCT SHALL BE THERMAFLEX MK-G AND SECURED WITH STAINLESS STEEL DRAWBANDS.
7. PROVIDE ACOUSTICALLY LINE RETURN DUCT UP TO RTU.
8. ALL EXPOSED SUPPLY DUCTWORK SHALL BE ACOUSTICALLY LINED, DIMENSIONS INDICATED ARE INTERIOR OF LINING.
9. TERMINATE FLUE EXHAUST AND OUTSIDE AIR INTAKE AT BUILDING EXTERIOR WITH MANUFACTURER'S CONCENTRIC WALL KIT.
10. TERMINATE 4Ø DRYER EXHAUST AT BUILDING EXTERIOR WITH MANUFACTURER'S CONCENTRIC WALL KIT.
11. EXHAUST FAN SHALL BE CONTROLLED BY WALL SWITCH. M.C. SHALL COORDINATE FINAL LOCATION ON WALL SWITCH WITH OWNER PRIOR TO CONSTRUCTION.
12. TERMINATE FLUE EXHAUST AND OUTSIDE AIR INTAKE AT BUILDING EXTERIOR WITH MANUFACTURER'S 3" PP CONCENTRIC VENT KIT.

LEGEND

- SUPPLY DIFFUSER: TITUS MODEL TMS STEEL CONSTRUCTION STANDARD WHITE FINISH-REFER TO DRAWING FOR FRAME AND NECK SIZE
- RETURN REGISTER TITUS MODEL 350ZRL 0° FIXED DEFLECTION 3/4" SPACING STEEL CONSTRUCTION STANDARD WHITE FINISH
- SUPPLY GRILLE TITUS MODEL 300ZRL 0° FIXED DEFLECTION 3/4" SPACING STEEL CONSTRUCTION STANDARD WHITE FINISH
- RG / EG RETURN/EXHAUST GRILLE TITUS MODEL 350ZRL 0° FIXED DEFLECTION 3/4" SPACING STEEL CONSTRUCTION STANDARD WHITE FINISH
- TD-# 12x12 ACCOUSTICALLY LINED TRANSFER DUCT TD-10 10x10 TRANSFER TD-12 12x12 TRANSFER TD-14 14x14 TRANSFER
- DENOTES 1" DOOR UNDERCUT
- FLEX DUCT
- FLEX CONNECTION
- VD VOLUME DAMPER
- MD 24V 2-POSITION MOTORIZED DAMPER
- THERMOSTAT
- SD SMOKE DUCT DETECTOR
- RTU # GAS-FIRED, DX COOLED ROOFTOP UNIT
- EF # EXHAUST FAN
- GUH # GAS UNIT HEATER
- EUH # ELECTRIC UNIT HEATER

studio 1200, LLC
511 MILLBURN AVENUE
SHORT HILLS, NJ 07078
973.376.5111
973.376.5011
www.studio1200.com
CERITFICATE OF AUTHORIZATION # AC-710

Nancy Dougherty, AIA, LEED
NJ-AI 14861/NY-025099/CT-ARI.0011798

MEP CONSULTANT:
Roxbury Engineering Associates, L.L.C.
3 Gold Mine Road
Flanders, NJ 07836
Phone: (973) 252-6973
Fax: (973) 252-7028
COA: 24GA28096600
Rick Macieko, PE
NJ PE: 37111 USVI PE: 0-4263-1B
NY PE: 087618 MD PE: 50005
PA PE: 0777177 CT PE: 32573

REA PROJECT NO. 18-1451

STATE OF NEW JERSEY RICHARD MACIEKO No. GE37111 LICENSED PROFESSIONAL ENGINEER

NO	ISSUE	DATE
1	ISSUED FOR BID & PERMIT	10/24/18
2	NJSEA PERMIT REVIEW	12/4/18
3	REVISED PER NJSEA COMMENTS	01/02/19
4	REVISED PER DUST COLLECTION RECEP. & MILL AREA EXHAUST	01/24/19
5	REVISED PER NJSEA COMMENTS	02/07/19
6	CONTRACT CONFORMANCE SET	02/20/19

BOLERO SNORT BREWERY
316 20TH STREET
CARLSTADT, NJ

MAIN LEVEL
MECHANICAL NEW WORK
PLAN

M1.0

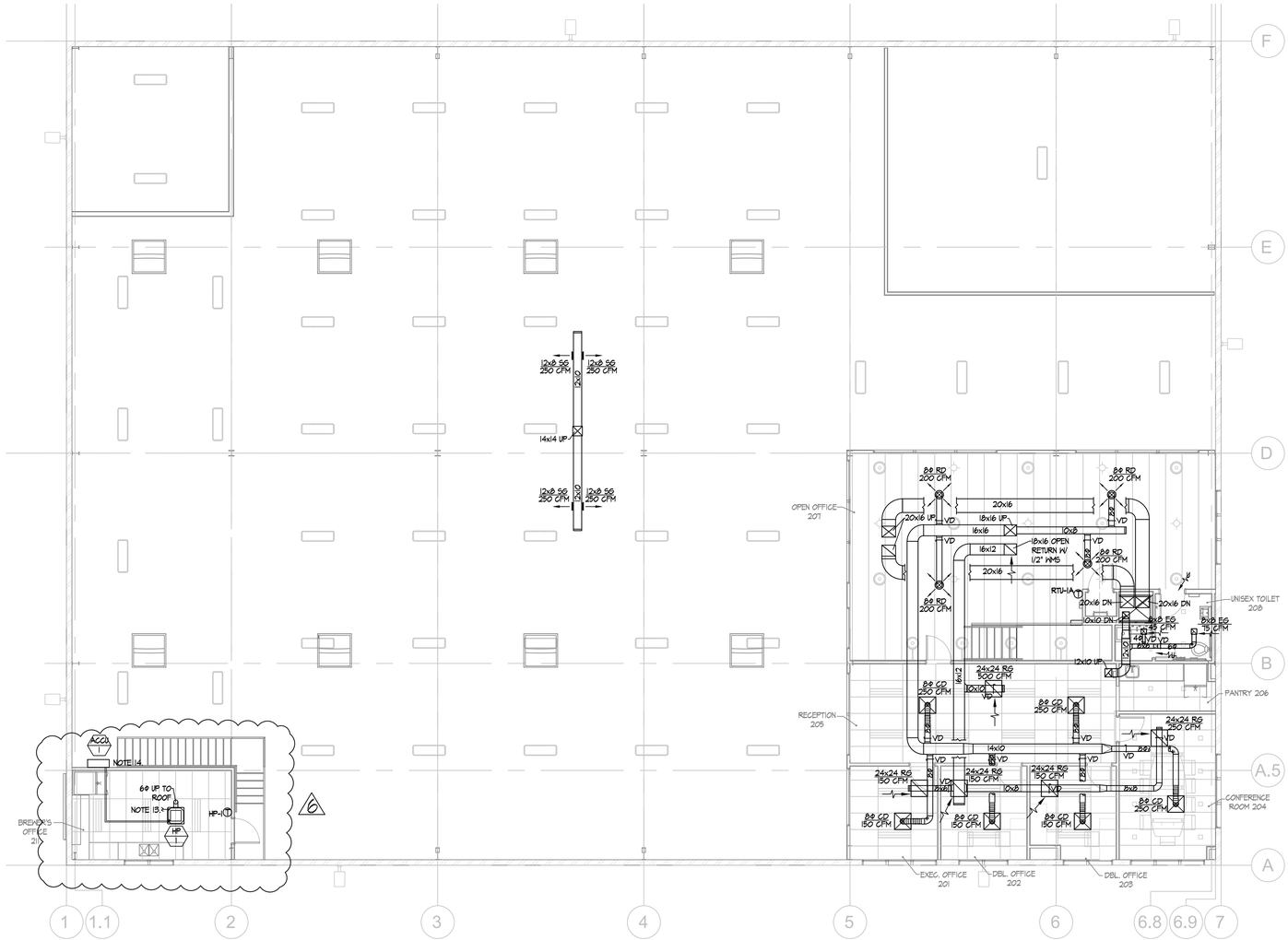

UPPER LEVEL MECHANICAL NEW WORK PLAN
SCALE: 1/8"=1'-0"

MECHANICAL NOTES:

1. ALL MECHANICAL WORK SHALL BE DONE IN ACCORDANCE WITH THE 2015 INTERNATIONAL MECHANICAL CODE, 2015 NATIONAL STANDARD PLUMBING CODE, 2015 INTERNATIONAL BUILDING CODE (NJ EDITION) AND THE 2015 INTERNATIONAL FIRE CODE.
2. MECHANICAL CONTRACTOR SHALL INSTALL DUCTWORK, PIPING, ETC TO MAINTAIN DEDICATED SPACE ABOVE ALL ELECTRICAL EQUIPMENT IN ACCORDANCE WITH NEC. COORDINATE INSTALLATION WITH ELECTRICAL CONTRACTOR.
3. THE MECHANICAL CONTRACTOR SHALL PROVIDE ALL DISCONNECT SWITCHES, MOTOR STARTERS, ETC. FOR MECHANICAL EQUIPMENT SUPPLIED.
4. MECHANICAL CONTRACTOR SHALL HAVE A CERTIFIED INDEPENDENT BALANCING CONTRACTOR BALANCE THE AIR SYSTEM TO THE QUANTITIES SHOWN. PROVIDE BALANCE REPORT TO OWNER, ARCHITECT & ENGINEER UPON COMPLETION.
5. MAXIMUM PERMISSABLE FLEX DUCT TO AIR OUTLET IS 6'-0".
6. ALL FLEX DUCT SHALL BE THERMAFLEX MK-G AND SECURED WITH STAINLESS STEEL DRAWBANDS.
7. PROVIDE ACOUSTICALLY LINE RETURN DUCT UP TO RTU.
8. ALL EXPOSED SUPPLY DUCTWORK SHALL BE ACOUSTICALLY LINED, DIMENSIONS INDICATED ARE INTERIOR OF LINING.
9. TERMINATE FLUE EXHAUST AND OUTSIDE AIR INTAKE AT BUILDING EXTERIOR WITH MANUFACTURER'S CONCENTRIC WALL KIT.
10. TERMINATE 4ø DRYER EXHAUST AT BUILDING EXTERIOR WITH MANUFACTURER'S CONCENTRIC WALL KIT.
11. EXHAUST FAN SHALL BE CONTROLLED BY WALL SWITCH. M.C. SHALL COORDINATE FINAL LOCATION ON WALL SWITCH WITH OWNER PRIOR TO CONSTRUCTION.
12. TERMINATE FLUE EXHAUST AND OUTSIDE AIR INTAKE AT BUILDING EXTERIOR WITH MANUFACTURER'S 3" PP CONCENTRIC VENT KIT.
13. M.C. SHALL EXTEND CONDENSATE PIPING TO FLOOR BELOW AND TERMINATE INDIRECTLY AT FLOOR DRAIN IN BOILER ROOM.
14. CONDENSING UNIT SHALL BE MOUNTED ON WALL. COORDINATE FINAL MOUNTING LOCATION WITH OWNER PRIOR TO CONSTRUCTION.

LEGEND

- SUPPLY DIFFUSER: TITUS MODEL TMS STEEL CONSTRUCTION STANDARD WHITE FINISH-REFER TO DRAWING FOR FRAME AND NECK SIZE
- RETURN REGISTER: TITUS MODEL 350ZRL 0° FIXED DEFLECTION 3/4" SPACING STEEL CONSTRUCTION STANDARD WHITE FINISH
- SUPPLY GRILLE: TITUS MODEL 300ZRL 0° FIXED DEFLECTION 3/4" SPACING STEEL CONSTRUCTION STANDARD WHITE FINISH
- RG — RETURN/EXHAUST GRILLE: TITUS MODEL 350ZRL 0° FIXED DEFLECTION 3/4" SPACING STEEL CONSTRUCTION STANDARD WHITE FINISH
- EG — 12x12 ACCOUSTICALLY LINED TRANSFER DUCT
  TD-10 10x10 TRANSFER
  TD-12 12x12 TRANSFER
  TD-14 14x14 TRANSFER
- DENOTES 1" DOOR UNDERCUT
- FLEX DUCT
- FLEX CONNECTION
- VD — VOLUME DAMPER
- MD — 24V 2-POSITION MOTORIZED DAMPER
- THERMOSTAT
- SD — SMOKE DUCT DETECTOR
- RTU 1 — GAS-FIRED, DX COOLED ROOFTOP UNIT
- EF 1 — EXHAUST FAN
- GUH 1 — GAS UNIT HEATER
- EUH 1 — ELECTRIC UNIT HEATER

studio 1200, LLC
511 MILLBURN AVENUE
SHORT HILLS, NJ 07078
973.376.5111
973.376.5011
www.studio1200.com
CERITFICATE OF AUTHORIZATION # AC-710

Nancy Dougherty, AIA, LEED
NJ-AI 14861/NY-025099/CT-ARI.0011798

MEP CONSULTANT:
Oxbury Engineering Associates, L.L.C.
3 Gold Mine Road
Flanders, NJ 07836
Phone: (973) 252-6973
Fax: (973) 252-7028
COA: 24GA28096600
Rick Macieko, PE
NJ PE: 37111 USVI PE: 0-4263-1B
NY PE: 087618 MD PE: 50005
PA PE: 0777177 CT PE: 32573

REA PROJECT NO. 18-1451

STATE OF NEW JERSEY RICHARD MACIEKO No. GE37111 PROFESSIONAL ENGINEER

NO	ISSUE	DATE
1	ISSUED FOR BID & PERMIT	10/24/18
2	NJSEA PERMIT REVIEW	12/4/18
3	REVISED PER NJSEA COMMENTS	01/02/19
4	REVISED PER DUST COLLECTION RECEP. & MILL AREA EXHAUST	01/24/19
5	REVISED PER NJSEA COMMENTS	02/07/19
6	CONTRACT CONFORMANCE SET	02/20/19

BOLERO SNORT BREWERY
316 20TH STREET
CARLSTADT, NJ

UPPER LEVEL MECHANICAL NEW WORK PLAN

M1.1

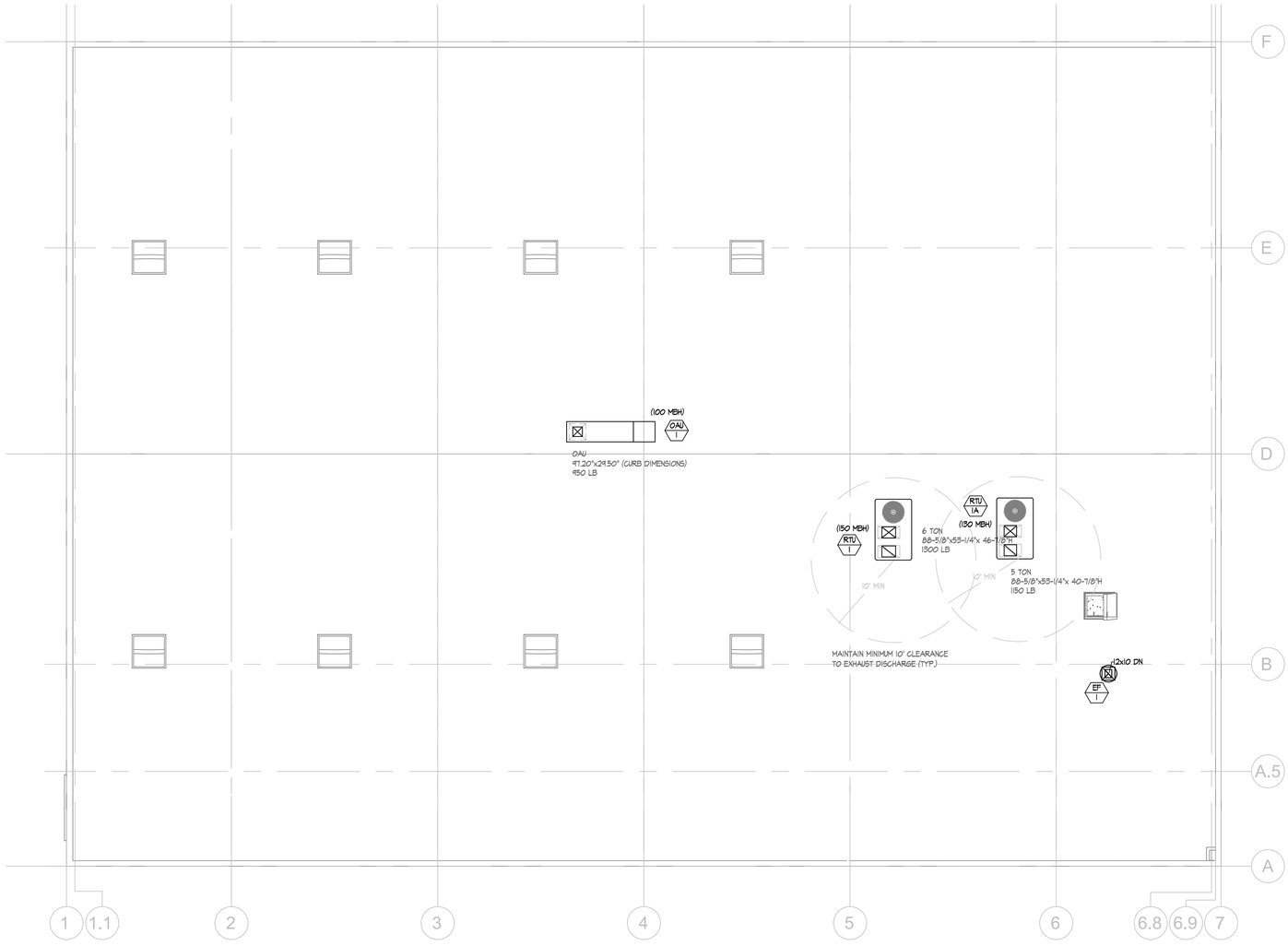

ROOF MECHANICAL NEW WORK PLAN
SCALE: 1/8"=1'-0"

MECHANICAL NOTES:

1. ALL MECHANICAL WORK SHALL BE DONE IN ACCORDANCE WITH THE 2015 INTERNATIONAL MECHANICAL CODE, 2015 NATIONAL STANDARD PLUMBING CODE, 2015 INTERNATIONAL BUILDING CODE (NJ EDITION) AND THE 2015 INTERNATIONAL FIRE CODE.
2. MECHANICAL CONTRACTOR SHALL INSTALL DUCTWORK, PIPING, ETC TO MAINTAIN DEDICATED SPACE ABOVE ALL ELECTRICAL EQUIPMENT IN ACCORDANCE WITH NEC. COORDINATE INSTALLATION WITH ELECTRICAL CONTRACTOR.
3. THE MECHANICAL CONTRACTOR SHALL PROVIDE ALL DISCONNECT SWITCHES, MOTOR STARTERS, ETC. FOR MECHANICAL EQUIPMENT SUPPLIED.
4. MECHANICAL CONTRACTOR SHALL HAVE A CERTIFIED INDEPENDENT BALANCING CONTRACTOR BALANCE THE AIR SYSTEM TO THE QUANTITIES SHOWN. PROVIDE BALANCE REPORT TO OWNER, ARCHITECT & ENGINEER UPON COMPLETION.
5. MAXIMUM PERMISSABLE FLEX DUCT TO AIR OUTLET IS 6'-0".
6. ALL FLEX DUCT SHALL BE THERMAFLEX MK-G AND SECURED WITH STAINLESS STEEL DRAWBANDS.
7. PROVIDE ACOUSTICALLY LINE RETURN DUCT UP TO RTU.
8. ALL EXPOSED SUPPLY DUCTWORK SHALL BE ACOUSTICALLY LINED, DIMENSIONS INDICATED ARE INTERIOR OF LINING.
9. TERMINATE FLUE EXHAUST AND OUTSIDE AIR INTAKE AT BUILDING EXTERIOR WITH MANUFACTURER'S CONCENTRIC WALL KIT.
10. TERMINATE 4Ø DRYER EXHAUST AT BUILDING EXTERIOR WITH MANUFACTURER'S CONCENTRIC WALL KIT.
11. EXHAUST FAN SHALL BE CONTROLLED BY WALL SWITCH. M.C. SHALL COORDINATE FINAL LOCATION ON WALL SWITCH WITH OWNER PRIOR TO CONSTRUCTION.
12. TERMINATE FLUE EXHAUST AND OUTSIDE AIR INTAKE AT BUILDING EXTERIOR WITH MANUFACTURER'S 3" PP CONCENTRIC VENT KIT.

LEGEND

- SUPPLY DIFFUSER:
  TITUS MODEL TMS STEEL CONSTRUCTION
  STANDARD WHITE FINISH-REFER TO DRAWING FOR FRAME AND NECK SIZE
- RETURN REGISTER
  TITUS MODEL 350ZRL 0° FIXED DEFLECTION
  3/4" SPACING STEEL CONSTRUCTION
  STANDARD WHITE FINISH
- SUPPLY GRILLE
  TITUS MODEL 300ZRL 0° FIXED DEFLECTION
  3/4" SPACING STEEL CONSTRUCTION
  STANDARD WHITE FINISH
- RG RETURN/EXHAUST GRILLE
  TITUS MODEL 350ZRL 0° FIXED DEFLECTION
  3/4" SPACING STEEL CONSTRUCTION
  STANDARD WHITE FINISH
- EG
- TD-# 12x12 ACCOUSTICALLY LINED TRANSFER DUCT
  TD-10 10x10 TRANSFER
  TD-12 12x12 TRANSFER
  TD-14 14x14 TRANSFER
- DENOTES 1" DOOR UNDERCUT
- FLEX DUCT
- FLEX CONNECTION
- VD VOLUME DAMPER
- MD 24V 2-POSITION MOTORIZED DAMPER
- T THERMOSTAT
- SD SMOKE DUCT DETECTOR
- RTU # GAS-FIRED, DX COOLED ROOFTOP UNIT
- EF # EXHAUST FAN
- GUH # GAS UNIT HEATER
- EUH # ELECTRIC UNIT HEATER

studio 1200, LLC
511 MILLBURN AVENUE
SHORT HILLS, NJ 07078
973.376.5111
973.376.5011
www.studio1200.com
CERITFICATE OF AUTHORIZATION # AC-710

Nancy Dougherty, AIA, LEED
NJ-AI 14861/NY-025099/CT-ARI.0011798

MEP CONSULTANT:
Roxbury Engineering Associates, L.L.C.
3 Gold Mine Road
Flanders, NJ 07836
Phone: (973) 252-6973
Fax: (973) 252-7028
COA: 24GA28096600
Rick Macieko, PE
NJ PE: 37111 USVI PE: 0-4263-1B
NY PE: 087618 MD PE: 50005
PA PE: 0777177 CT PE: 32573

REA PROJECT NO. 18-1451

STATE OF NEW JERSEY
RICHARD MACIEKO
No. GE37111
PROFESSIONAL ENGINEER

NO	ISSUE	DATE
1	ISSUED FOR BID & PERMIT	10/24/18
2	NJSEA PERMIT REVIEW	12/4/18
3	REVISED PER NJSEA COMMENTS	01/02/19
4	REVISED PER DUST COLLECTION RECEP. & MILL AREA EXHAUST	01/24/19
5	REVISED PER NJSEA COMMENTS	02/07/19
6	CONTRACT CONFORMANCE SET	02/20/19

BOLERO SNORT BREWERY
316 20TH STREET
CARLSTADT, NJ

ROOF MECHANICAL NEW WORK PLAN

M1.2

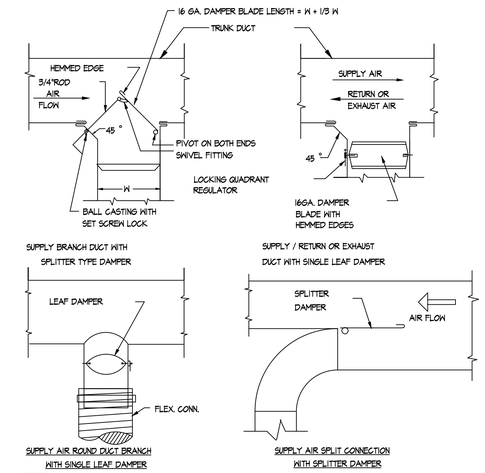

NOTES:
1. ALL BRANCH DUCTS SHALL BE PROVIDED WITH MANUALLY OPERATED VOLUME DAMPERS FOR BALANCING AIR SYSTEMS. THESE DAMPERS SHALL BE SEPARATE AND INDEPENDENT OF DAMPERS FURNISHED WITH DIFFUSERS AND REGISTERS, WHICH SHALL ONLY BE UTILIZED FOR TRIM BALANCING WITHOUT GENERATING NOISE.
2. FOR DUCTS WIDER THAN 48" USE MULTIPLE SINGLE LEAF DAMPERS OR OPPOSED-ACTION MULTI-BLADE DAMPERS; EACH WITH QUADRANT REGULATOR LOCKING

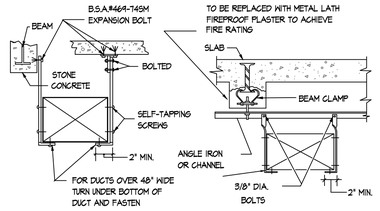

DUCT SIZE	HANGER SIZE	MAX. SPACING
UP THRU 2 SQ. FT.	1" X 1/16"	8' - 0"
2 THRU 4 SQ. FT	1" X 1/8"	8' - 0"
4 THRU 10 SQ. FT.	1" X 1/8"	6' - 0"
OVER 10 SQ. FT.	1" X 1/8"	4' - 0"

DUCT HANGING DETAIL AND SCHEDULE OF SUPPORTS
N.T.S.

NOTES
1. DISTANCE BETWEEN DUCT HANGERS SHALL BE IN ACCORDANCE WITH ASHRAE STANDARDS AND ALL APPLICABLE CODES.
2. BEAM CLAMPS SHALL HAVE MALLEABLE IRON JAWS TAPPED TO RECEIVE RIGHT AND LEFT HAND THREADED DROP FORGED SCREW HAVING A CENTER SECTION TAPPED FOR 5/8" DIAMETER THREADED ROD AND SHALL BE ADJUSTABLE TO FIT UP TO 12" WIDE FLANGE. CLAMPS SHALL BE " ACME ADJUSTABLE BEAM CLAMPS " AS MANUFACTURED BY JOHN SIMMON & CO. 54, NEW YORK. DUCTS MAY BE SUSPENDED BY OTHER TYPE DEVICE IF APPROVED BY THE BOARD OF STANDARDS AND APPEALS. A WRITTEN CERTIFICATE OF SUCH APPROVAL SHALL BE SUBMITTED TO THE ARCHITECT PRIOR TO INSTALLATION.

1 DUCTWORK DETAILS
Scale: NTS

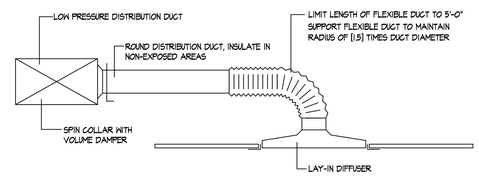

LOW PRESSURE DUCT AND LAY-IN DIFFUSER CONNECTION DETAIL
N.T.S.

DIMENSION OF LONGEST SIDE, INCHES	SHEET METAL GAGE (ALL FOUR SIDES)	MINIMUM REINFORCING ANGLE SIZE AND MAXIMUM LONGITUDINAL SPACING BETWEEN TRANSVERSE JOINT & /OR INTERMEDIATE REINFORCING	TRANSVERSE REINFORCING (1)					
			MIN. H. IN.	AT JOINTS				
				DRIVE SLIP / PLAIN S SLIP	HEMMED S SLIP	ALTERNT BAR SLIP	REIN-FORCED BAR SLIP	
				RECOM-MENDED GAGE	RECOM-MENDED GAGE	RECOM-MENDED GAGE	RECOM-MENDED GAGE	
UP THRU 12	26	NONE REQUIRED	1	26	26	24	24	
13 - 18	24	NONE REQUIRED	1	24	24	24	24	
19 - 30	24	1" X 1" X 1/8" @ 60 IN	1		24	24	24	
31 - 42	22	1" X 1" X 1/8" @ 60 IN	1			22	22	

(1) TRANSVERSE REINFORCING SIZE IS DETERMINED BY DIMENSION OF SIDE TO WHICH ANGLE IS APPLID.

2 DUCT CONSTRUCTION DETAIL
Scale: NTS

NOTE:
ON EXISTING INSTALLATIONS CUTTING, FLASHING, AND REROOFING BY A CERTIFIED ROOFING CONTR.

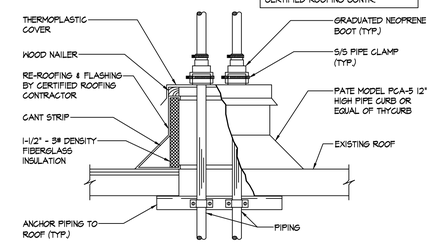

3 PIPE PENETRATION AT ROOF
Scale: NONE

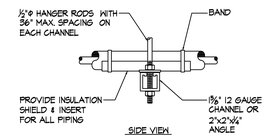

TRAPEZE HANGER FOR UP TO 1000LB. UNIFORM LOAD.

MAXIMUM PIPE/TUBING SUPPORT SPACING, FEET																			
NOM. SIZE	THRU 3/4"	1	1 1/4"	1 1/2"	2	2 1/2"	3	4	5	6	8	10	12	14	16	18	20	24
PIPE	7 FEET	7	7	9	10	11	12	14	16	17	19	22	25	25	27	28	30	32
TUBING	5 FEET	6	7	8	8	9	10	12	13	14	16	-	-	-	-	-	-	-
NOTE: FOR TRAPEZE HANGER TAKE SPACINGS OF SMALLEST SIZE ON TRAPEZE																			

4 PIPE HANGER SCHEDULE
SCALE: NONE

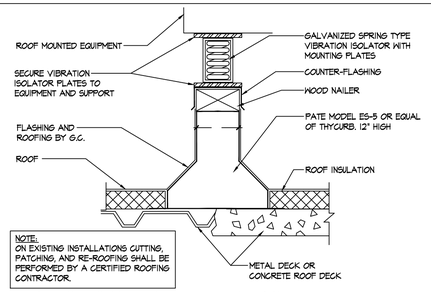

NOTE:
ON EXISTING INSTALLATIONS CUTTING, PATCHING, AND RE-ROOFING SHALL BE PERFORMED BY A CERTIFIED ROOFING CONTRACTOR.

5 EQUIPMENT SUPPORT DETAIL
Scale: NONE

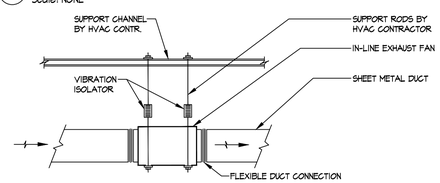

6 IN-LINE EXHAUST FAN MOUNTING DETAIL
SCALE: NONE

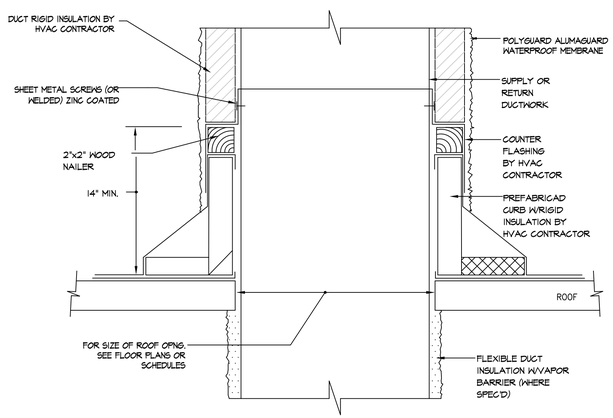

7 DUCT PENETRATION THROUGH ROOF DETAIL
SCALE: NONE

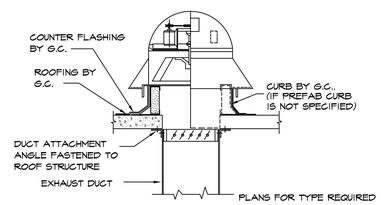

8 ROOF MOUNTED EXHAUST FAN
SCALE: NONE

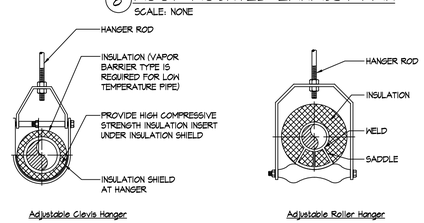

9 TYPICAL PIPE HANGER DETAILS
SCALE: NONE

NOTE: ON EXISTING INSTALLATIONS CUTTING, FLASHING, AND REROOFING BY A CERTIFIED ROOFING CONTR.

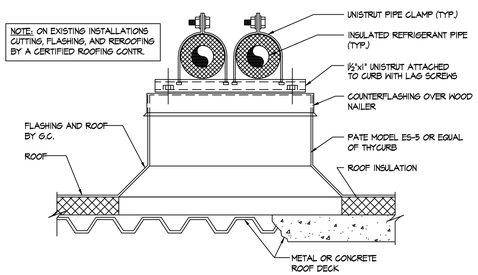

10 PIPE SUPPORT DETAIL AT ROOF
Scale: NONE

studio 1200, LLC
511 MILLBURN AVENUE
SHORT HILLS, NJ 07078
973.376.5111
973.376.5011
www.studio1200.com
CERITFICATE OF AUTHORIZATION # AC-710

Nancy Dougherty, AIA, LEED
NJ-AI 14861/NY-025099/CT-ARI.0011798

MEP CONSULTANT:
Roxbury Engineering Associates, L.L.C.
3 Gold Mine Road
Flanders, NJ 07836
Phone: (973) 252-6973
Fax: (973) 252-7028
COA: 24GA28096600
Rick Macieko, PE
NJ PE: 37111 USVI PE: 0-4263-1B
NY PE: 087618 MD PE: 50005
PA PE: 077177 CT PE: 32573

REA PROJECT NO. 18-1451

NO	ISSUE	DATE
1	ISSUED FOR BID & PERMIT	10/24/18
2	NJSEA PERMIT REVIEW	12/4/18
3	REVISED PER NJSEA COMMENTS	01/02/19
4	REVISED PER DUST COLLECTION RECEP. & MILL AREA EXHAUST	01/24/19
5	REVISED PER NJSEA COMMENTS	02/07/19
6	CONTRACT CONFORMANCE SET	02/20/19

BOLERO SNORT BREWERY
316 20TH STREET
CARLSTADT, NJ

MECHANICAL DETAILS

M2.0

RTU # — ROOF TOP EQUIPMENT SCHEDULE

TAG	SUPPLY FAN SECTION: CAPACITY (CFM)	FAN T.S.P. (IN)	FAN E.S.P. (IN)	MOTOR HP	MOTOR BHP	MOTOR RPM	OUTSIDE DESIGN CONDITIONS: COOLING °F DB	COOLING °F WB	HEATING (°F)	O.A. CFM	COOLING COIL: TOTAL (MBH)	SENSIBLE (MBH)	COND. OAT °F DB	HEATING: INPUT (MBH)	OUTPUT (MBH)	EFF. (%)	ELECTRICAL: ELECTRICAL (V/Φ/HZ)	FLA (AMPS)	MCA (AMPS)	OCP (AMPS)	EQUIPMENT: MANUF.	MODEL NUMBER	APPROX. UNIT DIMENSIONS (LxWxH)	AIRFLOW	WEIGHT (LBS)	NOTES
RTU-1	2000	-	1.00"	1	.95	1075	95	75	5	400	61.0	48.8	95	150.0	104.0	80	480/3/60	11.7	13.8	20	TRANE	YHC060F4	64-7/8" x 44-1/4" x 56-1/4"	DOWNFLOW	1150	1
RTU-1A	1200	-	.65"	1	.84	1075	95	75	5	240	49.9	40.0	95	120.0	96.0	80	480/3/60	10.8	12.8	15	TRANE	YHC048F4	64-7/8" x 44-1/4" x 56-1/4"	DOWNFLOW	1150	1

NOTES

1. FACTORY CURB, ECONOMIZER, STAINLESS STEEL GAS-FIRED HEATER, FULLY MODULATING OA ACTUATOR WENTHALPY CONTROL, BELT DRIVE, R410A REFRIGERANT, 120V CONVENIENCE OUTLET, 2" PLEATED 30% PRE-FILTER, UNIT MOUNTED DISCONNECT SWITCH, THROUGH BASE ELECTRIC & GAS.
2. FACTORY CURB, ECONOMIZER, VFD (PREMIUM EFFICIENCY MOTOR), STAINLESS STEEL GAS-FIRED HEATER, 2 COMPRESSOR, FULLY MODULATING OA ACTUATOR WENTHALPY CONTROL, R410A REFRIGERANT, 120V CONVENIENCE OUTLET, 2" PLEATED 30% PRE-FILTER, UNIT MOUNTED DISCONNECT SWITCH, THROUGH BASE ELECTRIC & GAS.

GUH # — GAS FIRED UNIT HEATER SCHEDULE

TAG	MFR	MODEL	TOTAL (CFM)			HEATING: INPUT MBH	OUTPUT MBH	EFF %	EAT	LAT	SIZE (LxWxH)	WEIGHT (LBS)	ELECTRICAL (60 HZ): FLA	MOCP	VOLTS PHASE	REMARKS
				RPM	MHP											
GUH-1	REZNOR	UDAS175	2242	1050	1/6	175	145.25	83	60	120.0	38-3/16x42x20-1/8	188	3.8	15	120/1Φ	NATURAL GAS-FIRED, PROVIDE WITH THERMOSTAT AND WALL MOUNTED COMBUSTION AIR/VENT KIT WITH CONCENTRIC ADAPTER, MFG. DISCONNECT SWITCH
GUH-2	REZNOR	UDAS175	2242	1050	1/6	175	145.25	83	60	120.0	38-3/16x42x20-1/8	188	3.8	15	120/1Φ	NATURAL GAS-FIRED, PROVIDE WITH THERMOSTAT AND WALL MOUNTED COMBUSTION AIR/VENT KIT WITH CONCENTRIC ADAPTER, MFG. DISCONNECT SWITCH
GUH-3	REZNOR	UDAS100	1345	1050	1/4	105	87.15	83	60	120.0	26-5/8x28-5/8x23-1/8	97	3.9	15	120/1Φ	NATURAL GAS-FIRED, PROVIDE WITH THERMOSTAT AND WALL MOUNTED COMBUSTION AIR/VENT KIT WITH CONCENTRIC ADAPTER, MFG. DISCONNECT SWITCH

HP # — HEAT PUMP SCHEDULE

TAG	MFR.	MODEL	SUPPLY CFM	O.A. CFM	ESP (IN)	TOTAL COOLING (MBH)	TOTAL HEATING (MBH)	REFRIGERANT: LIQUID	GAS	VOLTAGE	FLA	MCA	OCP	DIMENSIONS WxDxH	WEIGHT (LBS)	NOTES
HP-1	MITSUBISHI	SLZ-KF0RNA	300	50	N/A	9.0	9.0	1/4"	3/8"	208V-1Φ-60Hz	.20	.25	15	22-7/16"x22-7/16"x9-21/32"	37	2

1. CEILING MOUNTED CASSETTE UNIT.
   PROVIDE NEOPRENE-IN-SHEAR VIBRATION ISOLATION HANGERS, BUILT-IN CONDENSATE PUMP, PROGRAMMABLE ELECTRONIC SPACE THERMOSTAT CONTROLLER, OUTSIDE AIR CONNECTION, 1" HIGH EFFICIENCY MERV 10 FILTER.

ACCU # — AIR COOLED CONDENSER SCHEDULE

TAG	MFR.	MODEL	REFRIG.	GAS LINE	LIQUID LINE	COOLING (MBH)	HEATING (MBH)	VOLTAGE	FLA	MCA	OCP	SEER	DIMENSIONS WxDxH	WEIGHT (LBS)	NOTES
ACCU-1	MITSUBISHI	SUZ-KA09NA2	R410A	3/8"	1/4"	9.0	9.0	208V-1Φ-60Hz	6.2	9	15	22.4	31-1/2"x11-1/4"x21-5/8"H	81	1,2

1. CONDENSING UNIT SHALL BE MOUNTED ON WALL. VERIFY FINAL LOCATION WITH OWNER PRIOR TO CONTRUCTION.
2. PROVIDE ALL REQUIRED ANCILLARY PIPING AND SPECIALTIES INCLUDING, BRANCH PIPING HEADERS, T-BRANCH JOINT, ETC.

6

EF # — EXHAUST FAN SCHEDULE

TAG	LOCATION	AREA SERVED	TYPE	AIR FLOW (CFM)	STATIC PRESSURE (IN.WG)	FAN SPEED (RPM)	MOTOR: HP (H)	SPEED (RPM)	FLA	ELECTRICAL (V/Φ/HZ)	DESIGN BASIS: MANUFACTURER	MODEL NUMBER	DIMENSIONS DxH	WEIGHT (LBS)	NOTES
EF-1	ROOF	TOILET ROOMS/ JAN. CLOSET	BELT	660	.38	1559	1/6	1725	4.4	120/1/60	GREENHECK	GB-081-6	24.40"dx23.70"	51	1
EF-2	IN-LINE	MILL AREA	BELT	1000	.38	1673	1/4	1725	5.8	120/1/60	GREENHECK	EGB-9-4	23.50"Lx19.38"Wx19.43"H	83	2,3

1. PROVIDE NEMA 3R DISCONNECT SWITCH, ROOF CURB, HINGED CURB CAP, GALVANIZED BIRDSCREEN, SPRING VIBRATION ISOLATORS, FAN SHALL BE CONTROLLED BY 24 HR-7 DAY PROGRAMMABLE TIME SET TO RUN WHEN SPACE IS OCCUPIED.
2. FAN SHALL BE CONTROLLED BY WALL SWITCH. FINAL LOCATION OF WALL SWITCH TO BE COORDINATED WITH OWNER.
3. PROVIDE DISCONNECT SWITCH, EXTENDED LUBE LINES WITH GREASE FITTINGS, SPARE BELT, BELT GUARD, SPRING VIBRATION ISOLATORS, MOTOR OUTSIDE OF AIRSTREAM.

EUH # — ELECTRIC UNIT HEATER

TAG	MOUNTING	MFR.	MODEL	WATTS	(V/Φ/HZ)	MCA (AMPS)	O.C.P (AMPS)	DIMENSIONS WxDxH	WEIGHT (LBS)	NOTES
EUH-1	CEILING HUNG	QMARK	MUH03-81	3000	208/1/60	14.5	20	14"x7-1/2"x16"	27	1
EUH-2	CEILING HUNG	QMARK	GUX5008I2	5000	208/1/60	24	30	14"x7-1/2"x16"	27	1,2

1. PROVIDE DISCONNECT, FAN DELAY CONTROL, MANUAL RESET THERMAL CUTOUT, WALL MOUNTED 24 V THERMOSTAT
2. EXPLOSION PROOF UNIT

OAU # — OUTSIDE AIR UNIT

TAG	CFM	E.S.P.	RPM	TEMP RISE (°F)	INPUT (MBH)	OUTPUT (MBH)	MFR.	MODEL	(V/Φ/HZ)	MCA (AMPS)	O.C.P (AMPS)	DIMENSIONS LxWxH	WEIGHT (LBS)
OAU-1	1000	.80	1216	74.1	100.0	80.0	GREENHECK	IGX-108-H12	208/3/60	6.3	15	128.66"x29.5"x38.97"	856

studio 1200, LLC
511 MILLBURN AVENUE
SHORT HILLS, NJ 07078
973.376.5111
973.376.5011
www.studio1200.com
CERITFICATE OF AUTHORIZATION # AC-710

Nancy Dougherty, AIA, LEED
NJ-AI 14861/NY-025099/CT-ARI.0011798

MEP CONSULTANT:
Roxbury Engineering Associates, L.L.C.
3 Gold Mine Road
Flanders, NJ 07836
Phone: (973) 252-6973
Fax: (973) 252-7028
COA: 24GA28096600
Rick Macieko, PE
NJ PE: 37111 USVI PE: 0-4263-1B
NY PE: 087618 MD PE: 50005
PA PE: 0777177 CT PE: 32573

REA PROJECT NO. 18-1451

STATE OF NEW JERSEY — RICHARD MACIEKO — No. GE37111 — LICENSED PROFESSIONAL ENGINEER

NO	ISSUE	DATE
1	ISSUED FOR BID & PERMIT	10/24/18
2	NJSEA PERMIT REVIEW	12/4/18
3	REVISED PER NJSEA COMMENTS	01/02/19
4	REVISED PER DUST COLLECTION RECEP. & MILL AREA EXHAUST	01/24/19
5	REVISED PER NJSEA COMMENTS	02/07/19
6	CONTRACT CONFORMANCE SET	02/20/19

BOLERO SNORT BREWERY
316 20TH STREET
CARLSTADT, NJ

MECHANICAL SCHEDULES

M3.0

15-1.01 GENERAL REQUIREMENTS

A. Work of this Section shall conform to the requirements of the Contract Documents.

15-2.01 CONTRACT DRAWINGS

A. The Drawings and Specifications have been prepared in sufficient detail to enable one proficient in the art of Mechanical Construction to enter into an equitable contract and carry out the work in the true spirit of the designers intentions in accordance with the best practice for this class of work. No attempt has been made to detail items of materials or labor that are self-evident as necessary to effect a complete and perfect operating installation. Contractor shall furnish any and all items that may be required for the proper functioning of the system.

B. Drawings accompanying these specifications are intended to show only general arrangements and extent of all work to be done. Determine exact location and arrangement of all work as work progresses.

C. Locations of piping, ductwork, equipment, outlets, etc., shown on drawings are approximately correct but are subject to such modification as may be found necessary or desirable at time of installation in order to meet any structural conditions, existing conditions, and avoid interference with other work, existing or new, or equipment provided by the Owner. Make such changes as are required without extra cost.

15-3.01 SCOPE OF WORK

A. These specifications, and the accompanying drawings, are intended to secure the provision of all materials, ready for service, for complete Heating, Ventilating, and Air Conditioning Systems as called for herein. All systems shall be complete with all necessary appurtenances and minor auxiliaries required to make each system complete in every respect. All work described in the Specifications and not shown on the Drawings, or vice versa, shall be furnished and installed in complete working order. If mention has been omitted of any item of work or material for, or necessary to, the completion of the systems, then such items must be and hereby are included herein.

B. In general the work consists of but is not limited to the following:
   1. Obtain and pay for all permits in connection with HVAC work.
   2. Ceiling removal and reinstallation as required for this work (where accessible ceilings exist).
   3. Demolition and restoration of existing construction as required.
   4. Cutting, patching, and finishing.
   5. Renovation/demolition/removals of existing.
   6. Mechanical equipment scheduled.
   7. Sheet metal work.
   8. Grilles, registers, and diffusers.
   9. Piping and ductwork insulation.
   10. Hangers and supports.
   11. Air balancing.
   12. Tests, inspections, operating instructions, and guarantees.

15-4.01 RELATED WORK BY OTHERS (under same contract)

A. The following items are to be performed by licensed Contractors who shall be a sub-Contractor to the HVAC Contractor or prime Contractor.

B. They shall be under direct supervision of said prime Contractor and it shall be his responsibility to guarantee all work performed by them is complete, in accordance with the contract documents and that all work is in conformance with current applicable codes.
   1. All electrical power wiring and conduit.
   2. All control wiring and conduit.
   3. General construction work.

15-5.01 PERMITS, RULES AND REGULATIONS

A. This Contractor shall give all necessary notices, obtain all permits, and pay all fees in connection with the work of this Section.

B. He shall comply with all laws, ordinances, rules, and regulations of the State, National Fire Protection Association, F.M., and Local Departments having jurisdiction over the work. These shall take precedence over any requirements of the Specifications where a conflict exists.

C. This, however, shall not be interpreted as permitting the use of equipment or material inferior to these specified unless their use is specifically prohibited by these laws, ordinances, rules, and regulations.

15-6.01 DEFINITIONS

A. For brevity in this specification, the words "HVAC Contractor" are used to refer to Contractor who shall perform all work in connection with the work specified in this Section.

15-7.01 EXPEDITING THE WORK

A. Work installed without consideration of equipment, piping, wiring, structure as designed, etc., which will necessitate changing or relocating to clear work of other trades, shall be changed or relocated by this Contractor at his expense.

15-8.01 ALTERATIONS - CHANGES AND REMOVALS FOR HVAC WORK

A. Make all such changes and removals of existing work as required to facilitate the carrying out of the alterations as intended, as required to properly join new work with existing work, and all as necessary to carry out and complete all of the work in accordance with the meaning and intent of the drawings and specifications.

B. All piping holes thru existing concrete floor shall be made by core drilling only.

C. Cap or plug all outlets where work is removed, dispose of all materials removed off of the premises or deliver to Owner as directed or noted on plans. Throughout altered areas where any existing work is not in use and which protrudes beyond wall, floor, or ceiling line, same shall be removed and capped or plugged behind the line of finished wall or ceiling as required.

D. Where existing work is permanently removed, this removal shall include all related hangers and supports, valves, fittings, insulation, etc.

E. Scheduling of shut down periods of existing facilities shall be discussed with and approved by the Engineer and/or Owner prior to proceeding with work. Owner must be given 24 hours notice prior to scheduling of meeting.

15-9.01 DRAWINGS AND MEASUREMENTS

A. Contractor shall examine drawings for the scope of all work and arrange his work so that no conflict will occur. Later changes required in his work which in the opinion of the Engineer would not be necessary had such examination been made, shall be made by this Contractor at his own expense.

B. Make all measurements at the job and verify all figured dimensions before proceeding with this work. Any discrepancies or interference shall be reported immediately to the Engineer.

C. This Contractor will be required to properly install the work under this Contract within the available space.

D. The Contractor shall visit the existing building and site and thoroughly familiarize himself with the existing conditions. No extra compensation will be allowed for additional work claimed, if such work could have been anticipated after careful examination of existing conditions.

15-10.01 SHOP DRAWINGS AND APPROVALS

A. Submit the following items for approval prior to commencement of work:
   1. Sheet metal work.
   2. Grilles, registers, and diffusers,
   3. Automatic temperature controls.
   4. Testing and balancing Sub-Contractor.

15-11.01 CUTTING AND PATCHING

A. Unless otherwise indicated or directed, this Contractor shall do all cutting, patching, and finishing throughout building as required. All necessary cutting shall be done by and with means approved by the Engineer, inclusive of holes in structural members, walls, floors, etc. Keep all cutting to a minimum.

B. Contractor shall use proper trades for the performance of patching and finishing work, and shall be responsible for all costs resulting therefrom. Materials and workmanship for patching and finishing work shall be equivalent to the existing work. All finish work shall be subject to approval by the Owner/ Engineer.

15-12.01 MATERIALS AND WORKMANSHIP

A. All materials shall be new, free from rust, flaw, and other defects, conforming to applicable specifications of American Society for Testing Materials and American Society of Mechanical Engineers, latest revision, and to requirements of all authorities having jurisdiction.

B. All labor shall be performed by skilled mechanics under experienced superintendents. All work shall be properly executed, presenting a neat and workmanlike appearance subject to the Engineer's approval.

C. Provide all level gauges, grease cups, grease gun fittings for machinery bearings as recommended by machinery manufacturer; and where lubricating means are not easily accessible, extend to accessible locations. Furnish all grease gun fittings of uniform type.

15-14.01 ACCESS TO EQUIPMENT

A. All equipment such as dampers, valves, cocks, and similar apparatus shall be made easily accessible.

B. Where it is evident that access would be difficult, call Engineer's attention to this fact before installing any work and follow his instructions.

15-17.01 MISCELLANEOUS STRUCTURAL STEEL AND SUPPORTS

I. Hangers and Supports:
   1. All lateral runs of piping shall be securely supported on approved hangers, rolls, brackets, etc., spaced not more than six feet on centers for piping up to and including 1¼", for larger piping spacing shall be ten feet on center and in manner to allow for proper expansion and isolation of vibration.
   2. No piping or equipment shall be supported from metal decking. In no case are pipe hangers to be supported from wood or fiber plugs or toggles inserted in holes drilled in the underside of the floor slab. No pipes shall be supported from other pipes.
   3. Secure all hanger rods to approved inserts, expansion bolts or "C"-type beam clamps as dictated by existing overhead construction.
   4. Provide all miscellaneous steel as required under this heading.
   5. All horizontal pipe, shall be supported as follows, unless otherwise indicated or shown on drawings:
      a. On adjustable steel clevis type hangers suspended on hanger rods, pipe sizes up to and including 2". For covered pipe provide covering protection saddles and adjustable clevis type hangers. Grinnell Fig. #65 and Fig. #160 or approved equal.
      b. For covered pipe, 2½" and larger, on adjustable steel inverted U-type hangers with cast iron pipe rolls and covering protection saddles, saddles to be tack welded to pipe. Grinnell Fig. #171 and #162 or approved equal.
   6. Hanger rods shall be steel, threaded with nuts and locknuts.
   7. Where pipe is run horizontally on walls utilize welded steel brackets to support same.

J. Escutcheons:
   1. Provide approved type of cast brass, chrome plated, escutcheon on all exposed and uncovered pipes that pass through ceilings, plenums, walls, and partitions.
   2. Floor and ceiling plates shall be standard or deep cup, as required to conceal pipe sleeve if same extends above finished floor. Plates at ceiling shall be fitted with set screws or other approved means to hold them in place.

K. Thoroughly clean piping of all foreign material such as chip, weld, spatter, dirt, etc., and flush clean. Install temporary strainers at strategic points in piping and remove same at completion of installation. Clean permanent strainers and dirt pockets before final tests. Operate all valves during flushing process to assure proper operation. Repack where necessary.

15-17.01 MISCELLANEOUS STRUCTURAL STEEL AND SUPPORTS

A. Provide miscellaneous structural steel and supports for all equipment supplied, including supplemental steel, wall mounted brackets, inserts, hangers rods, channels, beam clamps, anchors, diamond plates, floor mounted supports, angle framing for roof openings, etc. Submit details of all shapes and supports used to Engineer for approval.

B. Provide lintels for all unit ventilator wall box and louver openings in exterior walls. Refer to drawing details for same.

15-18.01 SHEET METAL WORK

A. Neatly construct and erect in accordance with SMACNA Standards all sheet metal work as shown or as required to carry out the intent of drawings and specifications, and as approved in all its parts and details. All appurtenances in sheet metal systems shall be of the same pressure classification of the ductwork to which they are connected.

B. Where ducts pass through walls, floors, plenums, or partitions, the space around ducts shall be sealed with mineral wool or other non-combustible/non-toxic material meeting ASTM E84-87, as required by the National Board of Fire Underwriters. Ducts shall be provided with sheet metal angle frames close fitted to the openings, for a completely airtight installation.

C. Necessary allowances and provisions shall be made for beams, posts, pipes, iron work or other existing obstructions in building whether or not the same is shown on the drawings. Where necessary to avoid structural or other existing conditions, ducts shall be arranged as directed by Engineer. Ducts must not be placed directly under electric light fixtures.

D. Ducts shall be made rigid and strongly supported with braces, ties, or angles to keep them true to shape and to prevent buckling. All joints shall be made tight and interior surfaces made smooth. Unless otherwise shown on drawings, or herein specified, ducts shall be constructed of galvanized steel of U.S. Standard sheet metal gauge, in accordance with recommendations of the BOCA National Mechanical Code.

E. Fire dampers, where required, shall be installed utilizing collars and connections as required by the conditions of their U.L. approval and listing. The fire damper manufacturer's standard details shall be adhered to exactly regarding configuration, metal gauge, joint connections, etc.

F. Elbows shall be built with an inside radius of not less than one duct width parallel to the radius. Where a shorter radius is used "Ductturns" or equal turning blades shall be installed. Square elbows with vanes or small radius elbows with vanes shall be used in location (a) where shown on drawings, (b) where space precludes the use of full radius elbows, (c) where change in direction provided a distance of less than ten times width of duct between two elbows, or (d) where distance from elbow to nearest supply air outlet is less than ten times width of duct. Offsets shall have an inside radius of not less than one duct diameter unless provided with concentric vanes.

G. The joining of sheet metal partitions or ducts with masonry walls shall be made with 2"x2"x⅜" angle iron, sealed with felt or caulking compound between masonry and angle iron surfaces to insure an airtight installation.

H. Volume dampers and splitter dampers shall be installed in each branch take-off whether or not shown on the plans and where otherwise required, directed or indicated. All dampers shall be substantially constructed of 16 gauge, the proportioning type and so installed as to prevent rattling. All dampers to be quadrant type with damper operators and shall be accessible. Volume dampers shall be opposed (multi) blade type. Damper operators shall include positive positioning mechanism.

I. All flat surfaces of ducts shall be cross-braced to prevent vibration and buckling.

J. Where required, access doors in ductwork shall be constructed of 18 gauge metal rigidly reinforced and insulated, furnished with necessary hardware and framing, including felted edges. When closed, they must be air tight. Access doors shall be located at fire dampers, automatic dampers, and all other equipment requiring access. Access doors shall be not less than 400 square inches, and square, except in ducts less than 20" wide one dimension shall be 20" and the other shall be 2" smaller than duct width and where noted on drawings of specific size. In addition, where a fire damper or other device, is constructed by assembling more than one unit, each unit shall be provided with an access door as hereinbefore described.

K. All connections to inlet and outlet of exhaust fans, unit ventilators, or air handling units provided with duct collars, shall be with U. L. approved non-toxic canvas sound isolated flexible connections, 16 oz. complete with clamping rim and bar, and to be of fire resistant and water proof construction. Allow at least 1" slack in these connections to assure that no vibration is transmitted from fan to duct work. Fabric connections shall not be less than 4" long. Canvas joints shall also be installed in all ducts crossing building expansion joints. Material shall have a flame spread rating of 25 or less and a smoke development rating of 50 or less when tested in accordance with ASTM E84-87.

L. Hangers shall be spaced to prevent sagging. Hangers shall consist of angle iron or channels across full width of duct supported by hanger rods with inserts, beam clamps, or expansion bolts, as required by construction. Sheet metal screws projecting into duct will not be permitted. Chain or strap hangers will not be permitted. Spacing of hangers shall be in accordance with SMACNA recommenda tions and the BOCA National Mechanical Code.

M. While the drawings shall be adhered to as closely as possible, the right is reserved to vary runs and sizes of ductwork, and they may be varied to make offsets where necessary or to preserve headroom and to accommodate existing conditions arising at buildings without additional cost to the Owner. Revised duct sizes shall have same cross sectional area.

15-20.01 REGISTERS, DIFFUSERS, AND GRILLES

A. Shall be of size, and capacities noted on drawings, and as manufactured by Titus, or approved equal.

B. The dimensions of all diffusers, registers, and grilles given on the drawings refer to the inside of the opening. All dimensions, shall be verified at the building by this Contractor.

C. Where structural or other existing conditions necessitate a change in the dimensions of any of faces shown, this Contractor shall advise the Engineer and make such changes without extra compensation

D. Finish of all diffusers, grilles, registers shall be white baked enamel, unless Owner directs otherwise.

15-22.01 INSULATION

A. Shall be as manufactured by Owens Corning, Certain Teed, or approved equal.

B. Furnish and install insulation and finish specified for all ductwork, piping, and equipment as herein specified and as required for protection of personnel and for avoidance of sweating.

C. All insulation shall be installed only by an approved Sub-Contractor and shall be equal to the grade and type specified, and shall be installed by the manufacturer or his authorized agent in accordance with the standards of the Heat and Cold Insulation Industry Fund, the manufacturer's recommendations, and the following specifications.

D. All piping, equipment shall be blown out, cleaned, tested and painted prior to the application of any covering, adhesives, sealers, and mastics shall not be applied when the ambient temperature is below 40°F, above 110°F or surfaces are wet.

E. All insulation shall have composite (insulation jacket or facing and adhesive) fire and smoke hazard ratings as tested by procedure ASTM E-84, NFPA 255, and UL 723 not exceeding:

Flame Spread	25
Smoke Developed	50
Fuel Contribution	50

Accessories such as adhesives, mastics, cements, tapes, and cloths for fittings shall have component ratings as listed above. All products shall bear UL labels indicating the above are not exceeded.

F. All insulation shall be continuous through wall openings and pipe sleeves.

G. All pipe insulation shall be properly protected by full 180°, 18 gauge galvanized steel, 14 inch long insulation protection saddles.

H. Unless otherwise noted, all concealed supply, return (on units with cooling), and outside air ductwork shall be insulated with 1½" thick type ED-150 flexible duct wrap with K=-.24 at 75°F and with type FRK factory applied vapor barrier jacket. Insulation shall be wrapped tightly on the duct work with all circumferential joints butted and longitudinal joints overlapped a minimum of 2". Adhere insulation to metal with 4" strips of insulation bonding adhesive at 8" O.C. Additionally secure insulation to the bottom of rectangular duct work over 24" wide with mechanical fasteners at not more than 18" O.C. On circumferential joints, the 2" flange of the facing and on longitudinal joints, the overlap shall be secured using ⅜" flare-door staples applied 6" O.C. and taped with minimum 3" wide foil reinforced kraft tape. All pin penetrations or punctures in facing shall also be taped.

I. All concealed and exposed fittings, valves, and flanges shall be insulated with segments of the pipe insulation, with thickness same as adjacent pipe insulation and sealed Zeston pre-molded fitting covers. Vapor barrier characteristics and thermal performance must be equal to that of adjacent pipe insulation.

J. All refrigerant liquid and suction lines shall be insulated as follows:
   1. All refrigerant liquid and suction lines shall be insulated with ½" thick flexible, closed-cell elastometric insulation in tubular form, AP Armaflex as manufactured by Armacell or approved equal.
   2. Insulation materials shall have a closed-cell structure to prevent moisture from wicking, which makes it an efficient insulation.
   3. Insulation material shall be manufactured without the use of CFC's, HFC's, or HCFC's. It shall also be formaldehyde free, low VOC's, fiber free, duct free, and resistant to mold and mildew.
   4. Materials shall have a flame spread index of less than 25, and a smoke-developed index of less than 50 when tested in accordance with ASTM E 84, latest revision. In addition, the product, when tested, shall not melt or drip flaming particles, the flame shall not be progressive, and all materials shall pass simulated end-use fire tests.
   5. Materials shall have a maximum thermal conductivity of 0.27 Btu-in./h-ft2-°F at a 75°F mean temperature when tested in accordance with ASTM C 177 or ASTM C 518, latest revision.
   6. Materials shall have a maximum water vapor transmission of 0.08 perm-inches when tested in accordance with ASTM W 96, Procedure A, latest revision.
   7. All seam and butt joints shall be adhered and sealed using Armaflex 520 or 520 BLV adhesive.
   8. All fittings shall be insulated with the same insulation thickness as the adjacent piping. All seams and mitered joints shall be adhered with Armaflex 520 or 520 BLV adhesive. Screwed fittings shall be sleeved and adhered with a minimum 1" overlap onto the adjacent insulation.
   9. All flanges, valves, strainers, and Victaulic-type couplings shall be insulated using Armaflex donuts that shall be covered with sheet or oversized tubular insulation.
   10. Pipe Hanger Locations: Armaflex IPH insulation pipe hangers shall be used to prevent compression of insulation at unistrut clamps, clevis hangers, or locations where the insulation shall be compressed due to weight of the pipe.
   11. All outdoor exposed piping shall be painted with two (2) coats of WB Armaflex Finish. Prior to applying the Finish, the insulation shall be wiped clean with denatured alcohol. The Finish shall not be tinted.
   12. All outdoor exposed piping shall have the seams located on the lower half of the pipe.

K. All existing insulation shall be patched at new connection to existing.

L. Provide heavy density calcium silicate insulation at all pipe insulation protection shields.

M. All spiral ductwork shall be double wall insulated R-4 minimum.

N. All duct liner material shall be Owens Corning QuietR AcoustiTex Type 200, R-6 or equivalent.

15-28.01 ELECTRICAL WORK

A. Unless otherwise noted, all electrical power wiring required for the completion of work under this Section will be provided by the Electrical Sub-Contractor. All power required for control panels and control wiring for A.T.C. Contractor.

B. Wiring diagrams shall be submitted by the Contractor to the Engineer for approval. Each diagram shall clearly identify all wiring requirements in accordance with contract drawings and specifications, shall reflect a totally operable job and shall be completely integrated.

15-31.01 OPERATING TESTS

A. After installation work has been completed, tested, adjusted, and approved, test system continuously under normal operating conditions, for ten 8-hour days, or longer when so directed, to demonstrate that they fulfill requirements of plans, specifications and that they operate satisfactorily.

B. Operating tests shall be made during heating season of the first year of operation at times when directed, for proper setting and adjusting controls under peak load conditions.

C. Subject ventilating, air heating, and air conditioning systems to operating tests for period of 8 hours minimum for each system to demonstrate that each complies with requirements of plans and specifications; that circulation is good at all points, that flow is equalized and air quantities are correct; that all controls are functioning properly and equipment operates satisfactorily.

15-33.01 TESTING

A. HVAC Contractor shall procure the service of an independent test company which specializes in testing of heating, ventilating, and air conditioning systems, to balance, adjust, and test air and water moving equipment and systems.

B. Testing shall be conducted on systems during various phases of completion as necessary and as requested by Engineer to insure compliance with plans and specifications while installation is still accessible. Final testing and balancing shall be conducted after system has been completed and is in full working order. Contractor shall put all heating, ventilating, exhaust and air conditioning systems and equipment into full operation and shall continue operation of same during each working day of testing and balancing.

C. Contractor shall make any replacements in fan drives, pulleys, and belts and furnish additional dampers required for correct balance as required to meet design data.

D. All necessary stop valves, relief valves, and safety devices as required by local governing ordinances, or any other codes or authorities having jurisdiction shall be furnished and installed by HVAC Contractor.

E. Any leak, defect, or deficiency discovered by tests shall be repaired or made good. Caulking of pipe joints and peening of welds to remedy leaks will not be permitted.

F. Tests reporting forms shall be submitted on standard 8-1/2 x 11 good quality paper, and be bound together to form a complete report. All forms shall be submitted in typewritten form; handwritten forms are not acceptable. Cover of first sheet shall list the name of the job and the location of same. A minimum of five copies shall be submitted. Include in the report single line drawings of all systems with all outlets numbered.

G. Information shall include the following:
   1. Diffusers, grilles, and registers.
      a. Fan system and/or zone number.
      b. Room number or area designation.
      c. Outlet code number, which shall correspond to code number of outlet on air balance code drawings.
      d. Size of outlet - manufacturer's listed size.
      e. Type of outlet per manufacturer's model designation.
      f. Manufacturer of outlet.
      g. Manufacturer's effective area for each size.
      h. Required FPM and CFM at each outlet.
      i. Test resultant FPM and CFM at each outlet.
      j. Each sheet shall be arranged in columns and all final sheets shall be neatly typed.

B. Testing and adjusting of individual outlets shall be performed under procedures recom- mended by the various manufacturers of the outlets. All outlets shall be set for air pattern required and + 5% of required CFM. All main supply air and return air to be adjusted and set for design CFM indicated + 5%. Outlet CFM shall be established by use of duct balancing dampers before outlet dampers are adjusted as much as possible.

15-34.01 CLEANING UP

Contractor shall, during the time he is engaged on contract work, keep everything used in conjunction with project in an orderly and clean condition and shall periodically during the progress of the work or when directed by the Engineer's superintendent to do so, clean up and remove all rubbish accumulated from his work from the building at his own expense.

15-35.01 RECORD DRAWINGS

During construction, Contractor shall keep an accurate record of all deviations between work as shown on the drawings and that which is actually installed. The cost of furnishing prints and preparing record drawings showing all deviations shall be borne by this Contractor and shall be included in his bid.

Refer to General Conditions for record drawing requirements.

15-36.01 OPERATING AND MAINTENANCE INSTRUCTIONS

This Contractor shall provide an experienced operating Engineer competent to instruct the Owner as to the operation and maintenance of the equipment installed under this Contract and shall provide a typewritten schedule of principal items for maintaining HVAC equipment and a schedule of the complete cycle of operation of all air conditioning apparatus. The schedule shall be clear and concise as to the proper sequence of operation for starting all equipment, opening, and closing of valves, etc., as required for starting of cooling cycle, maintenance of heating and conditioning equipment, etc.

The Contractor shall also assemble three binders which shall include certified prints and maintenance instructions for all mechanical equipment. The binders shall be delivered to the Engineer for approval and submission to the Owner.

15-37.01 GUARANTEES

Shall be furnished by the Contractor for all labor and materials for a period of one (1) year from the date of final acceptance of his work by the Owner, which shall include an agreement to repair and make good at his expense any and all defects which may appear in his work or materials during that time, which in the judgement of the Engineer, arise from defects in workmanship, imperfect or inferior materials.

The manufacturer of all equipment to be supplied under this contract by the HVAC Contractor shall warrant the same against all costs, including labor and material, arising out of defects in material and/or workmanship, for a period coextensive with the guarantee period provided in the contract documents, however the Contractor shall bear the responsibility for manufacturers compliance.

Where special guarantees covering installation, operation, or performance of any systems or appliances furnished under this contract are herein required, the full responsibility for the fulfillment of such guarantees shall be assumed by this Contractor who shall obtain written guarantee in triplicate from any and all SubContractors, two (2) copies of which shall be filed with Engineer before final acceptance.

Furnish extended 5 year guarantee for all refrigeration equipment.

15-38.01 BASE NAMED MANUFACTURERS, ALTERNATES, OR SUBSTITUTIONS

Where items of equipment and/or materials are specifically identified herein or on the drawings by a manufacturer's name or model or catalog number, only such specified items shall be used in the base bid.

The successful Contractor will be held to furnish specified items under his base bid.

studio 1200, LLC
511 MILLBURN AVENUE
SHORT HILLS, NJ 07078
973.376.5111
973.376.5011
www.studio1200.com
CERITFICATE OF AUTHORIZATION # AC-710

Nancy Dougherty, AIA, LEED
NJ-AI 14861/NY-025099/CT-ARI.0011798

MEP CONSULTANT:
Roxbury Engineering Associates, L.L.C.
3 Gold Mine Road
Flanders, NJ 07836
Phone: (973) 252-6973
Fax: (973) 252-7028
COA: 24GA28096600
Rick Macieko, PE
NJ PE: 37111 USVI PE: 0-4263-1B
NY PE: 087618 MD PE: 50005
PA PE: 077717 CT PE: 32573

REA PROJECT NO. 18-1451

STATE OF NEW JERSEY RICHARD MACIEKO GB37111 PROFESSIONAL ENGINEER

NO	ISSUE	DATE
1	ISSUED FOR BID & PERMIT	10/24/18
2	NJSEA PERMIT REVIEW	12/4/18
3	REVISED PER NJSEA COMMENTS	01/02/19
4	REVISED PER DUST COLLECTION RECEP. & MILL AREA EXHAUST	01/24/19
5	REVISED PER NJSEA COMMENTS	02/07/19
6	CONTRACT CONFORMANCE SET	02/20/19

BOLERO SNORT BREWERY
316 20TH STREET
CARLSTADT, NJ

MECHANICAL SPECIFICATIONS

M4.0

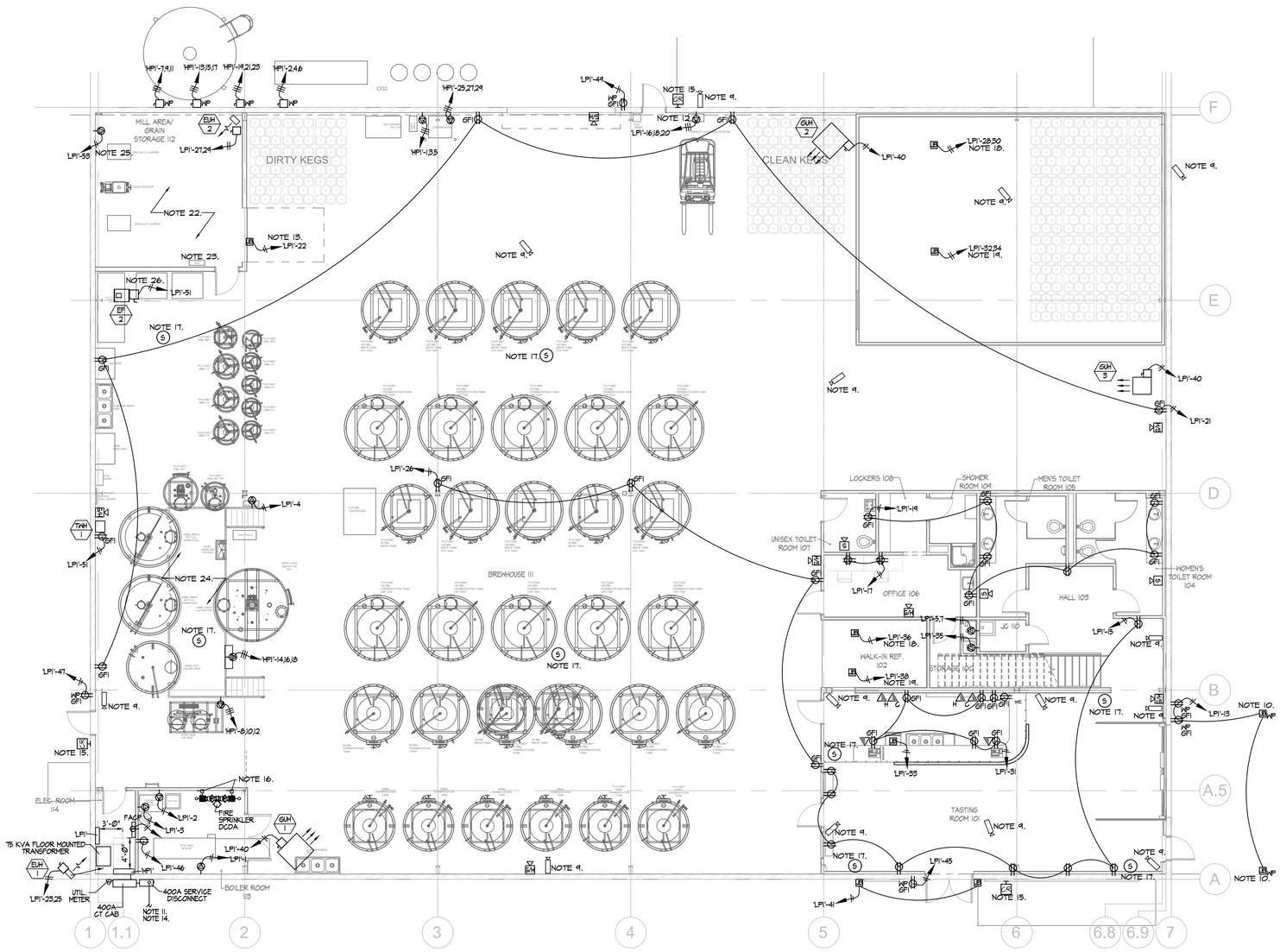

MAIN LEVEL POWER NEW WORK PLAN
SCALE: 1/8"=1'-0"

POWER & FIRE ALARM NOTES:

1. ALL WORK SHALL BE IN COMPLIANCE WITH THE 2014 NEC.
2. ELECTRICAL CONTRACTOR SHALL COORDINATE LOCATION OF PANEL WITH OTHER TRADES TO MAINTAIN DEDICATED ELECTRICAL SPACE ABOVE PANEL IN ACCORDANCE WITH NEC.
3. PROVIDE DEDICATED NEUTRALS FOR ALL CIRCUITS.
4. ALL ELECTRICAL PANELS SHALL BE FULLY RATED.
5. ALL WIRING SHALL BE THHN/THWN COPPER, MINIMUM 12 AWG UNLESS OTHERWISE NOTED.
6. ALL ELECTRICAL RECEPTACLES TO BE MOUNTED AT 18" AFF UNLESS OTHERWISE NOTED.
7. ALL WIRING SHALL BE TYPE MC WITH INSULATED GROUND.
8. THE E.C. SHALL REFER TO THE ARCHITECTURAL DRAWINGS FOR FINAL HEIGHT OF ALL RECEPTACLES AND DATA OUTLETS.
9. E.C. SHALL SHALL PROVIDE JUNCTION BOX WITH PULL STRING TO BUILDING INTERIOR TO FACILITATE WIRE PULL (BY OTHERS) FOR SECURITY CAMERA.
10. E.C. SHALL SHALL PROVIDE 120V POWER TO NEMA 5R JUNCTION BOX AT PATIO. REFER TO SITE/CIVIL DRAWINGS.
11. PROVIDE (2) 4" SCH. 80 PVC CONDUITS FROM ELECTRICAL ROOM TO UTILITY POLE, PROVIDE PULL STRING IN PIPE AND CAP EACH END FOR FUTURE WIRE PULL.
12. E.C. SHALL PROVIDE 20A-3P RECEPTACLE FOR FORKLIFT CHARGER.
13. E.C. SHALL PROVIDE 120V POWER TO MOTORIZED ROLLING DOOR. VERIFY FINAL POWER REQUIREMENTS WITH OWNER PRIOR TO CONSTRUCTION.
14. (4) #500 KCMIL CU COND. IN 3" EMT FROM UTILITY POLE.
15. E.C. SHALL PROVIDE ROUGH-IN FOR NEW CARD READER, PROVIDE ALL REQUIRED LINE AND LOW VOLTAGE WIRING AS REQUIRED, COORDINATE WIRING REQUIREMENTS WITH SECURITY VENDOR.
16. E.C. SHALL WIRE ALL WATERFLOW & TAMPER SWITCHES AT DOUBLE CHECK DETECTOR ASSEMBLY, FLOOR CONTROL VALVES AND VALVES SERVING ELEVATOR HOISTWAY BACK TO BUILDING FIRE ALARM PANEL. REFER TO SPRINKLER CONTRACTOR DRAWINGS FOR ALL LOCATIONS.
17. E.C. SHALL PROVIDE ROUGH-IN FOR NEW SPEAKER, PROVIDE ALL REQUIRED LINE AND LOW VOLTAGE WIRING AS REQUIRED, COORDINATE WIRING REQUIREMENTS WITH OWNER.
18. E.C. SHALL PROVIDE CIRCUIT FOR WALK-IN REFRIGERATOR CONDENSING UNIT, COORDINATE POWER REQUIREMENTS AND LOCATION WITH EQUIPMENT VENDOR.
19. E.C. SHALL PROVIDE CIRCUIT FOR WALK-IN REFRIGERATOR EVAPORATOR, COORDINATE POWER REQUIREMENTS AND LOCATION WITH EQUIPMENT VENDOR.
20. SERVICE RECEPTACLE PROVIDED WITH EQUIPMENT AND WIRED FROM LINE SIDE OF SERVICE DISCONNECT SWITCH.
21. FINAL LOCATION OF FLOOR BOX TO BE COORDINATED WITH FURNITURE VENDOR.
22. THE GRAIN STORAGE/MILL ROOM IS CLASSIFIED AS CLASS II, DIVISION 2, GROUP G. ALL WIRING, FITTINGS, SWITCHES, RECEPTACLES, LIGHTING, ETC. SHALL BE DUST TIGHT IN COMPLIANCE WITH THE APPLICABLE SECTIONS OF ARTICLE 502 OF THE 2014 NEC.
23. E.C. SHALL COORDINATE POWER REQUIREMENT FOR CONTROL PANEL IN MILL AREA WITH EQUIPMENT VENDOR.
24. WIRING METHOD IN BREWHOUSE SHALL COMPLY WITH NEC 300.6(D) FOR INDOOR WET LOCATIONS.
25. E.C. SHALL PROVIDE DEDICATED RECEPTACLE FOR DUST COLLECTION SYSTEM.
26. FAN PROVIDED WITH MANUFACTURER NON-FUSED DISCONNECT SWITCH, NEMA 1, 20A, 120V-1Ø.

ELECTRICAL LEGEND

"X" DUPLEX RECEPTACLE 120V, "X" ABOVE FINISHED FLOOR	WP WEATHERPROOF SINGLE POLE SWITCH
DOUBLE DUPLEX RECEPTACLE 120V	ELECTRICAL PANEL
GFI GROUND FAULT DUPLEX RECEPTACLE	CR DOOR ENTRY CARD READER, HARDWARE TO BE FURNISHED AND INSTALLED BY OTHER, ALL WIRING BY E.C.
208V RECEPTACLE	JB JUNCTION BOX
D DEDICATED 120V-20A RECEPTACLE "X" ABOVE FINISHED FLOOR	DISCONNECT SWITCH
HARDWIRE CIRCUIT	DATA/TEL OUTLET
WP GFI WATER-PROOF GROUND FAULT DUPLEX RECEPTACLE	H HDMI OUTLET
FLOOR MOUNTED (FLUSH) FULLY ADJUSTABLE, HUBBELL SYSTEM ONE 4X4 FLOOR BOX WITH TRIM (4) RECEPTACLES & (4) DATA PORTS	C COAX CABLE OUTLET (RG6)
S SPEAKER	1P BREAKER FEED W/CIRCUIT & PANEL
WEATHERPROOF SERVICE LIGHT STONCO 2V622 WITH (2) LED, 5000K, 120 LUMENS, 15W LAMPS	2P BREAKER FEED W/CIRCUIT & PANEL
	3P BREAKER FEED W/CIRCUIT & PANEL

FIRE ALARM SYMBOL KEY

FACP	FIRE ALARM CONTROL PANEL
H/S	ADA HORN/STROBE-80" A.F.F. SELECTABLE OUTPUT PROVIDE SYNCHRONIZATION MODULE
S	ADA STROBE ONLY SELECTABLE OUTPUT
SD	SMOKE DETECTOR NOTIFIER PHOTOELECTRIC TYPE
SD	DUCT SMOKE DETECTOR WITH SAMPLING TUBE
CO	CARBON MONOXIDE DETECTOR SYSTEM SENSOR MODEL CO1224TRR WITH MONITOR MODULE
	CAMERA

CABLE SCHEDULE:

ALL WIRING SHALL BE TWISTED SHIELDED PAIR APPROVED FIRE ALARM CABLE (TFPL) #14AWG OR #16AWG AS RECOMMENDED BY MANUFACTURER BASED ON DISTANCE

NOTES:

1. THE FIRE ALARM CONTRACTOR IS RESPONSIBLE FOR PROVIDING ALL REQUIRED EQUIPMENT CUT SHEETS, BATTERY CALCULATIONS, VOLTAGE DROP CALCULATIONS, ETC. ASSOCIATED WITH THE FIRE ALARM SYSTEM.

studio 1200, LLC
511 MILLBURN AVENUE
SHORT HILLS, NJ 07078
973.376.5111
973.376.5011
www.studio1200.com
CERITFICATE OF AUTHORIZATION # AC-710

Nancy Dougherty, AIA, LEED
NJ-AI 14861/NY-025099/CT-ARI.0011798

MEP CONSULTANT:
Roxbury Engineering Associates, L.L.C.
3 Gold Mine Road
Flanders, NJ 07836
Phone: (973) 252-6973
Fax: (973) 252-7028
COA: 24GA28096600
Rick Macieko, PE
NJ PE: 37111 USVI PE: 0-4263-1B
NY PE: 087618 MD PE: 50005
PA PE: 0777177 CT PE: 32573

REA PROJECT NO. 18-1451

NO	ISSUE	DATE
1	ISSUED FOR BID & PERMIT	10/24/18
2	NJSEA PERMIT REVIEW	12/4/18
3	REVISED PER NJSEA COMMENTS	01/02/19
4	REVISED PER DUST COLLECTION RECEP. & MILL AREA EXHAUST	01/24/19
5	REVISED PER NJSEA COMMENTS	02/07/19
6	CONTRACT CONFORMANCE SET	02/20/19

BOLERO SNORT BREWERY
316 20TH STREET
CARLSTADT, NJ

MAIN LEVEL POWER NEW WORK PLAN

E1.0

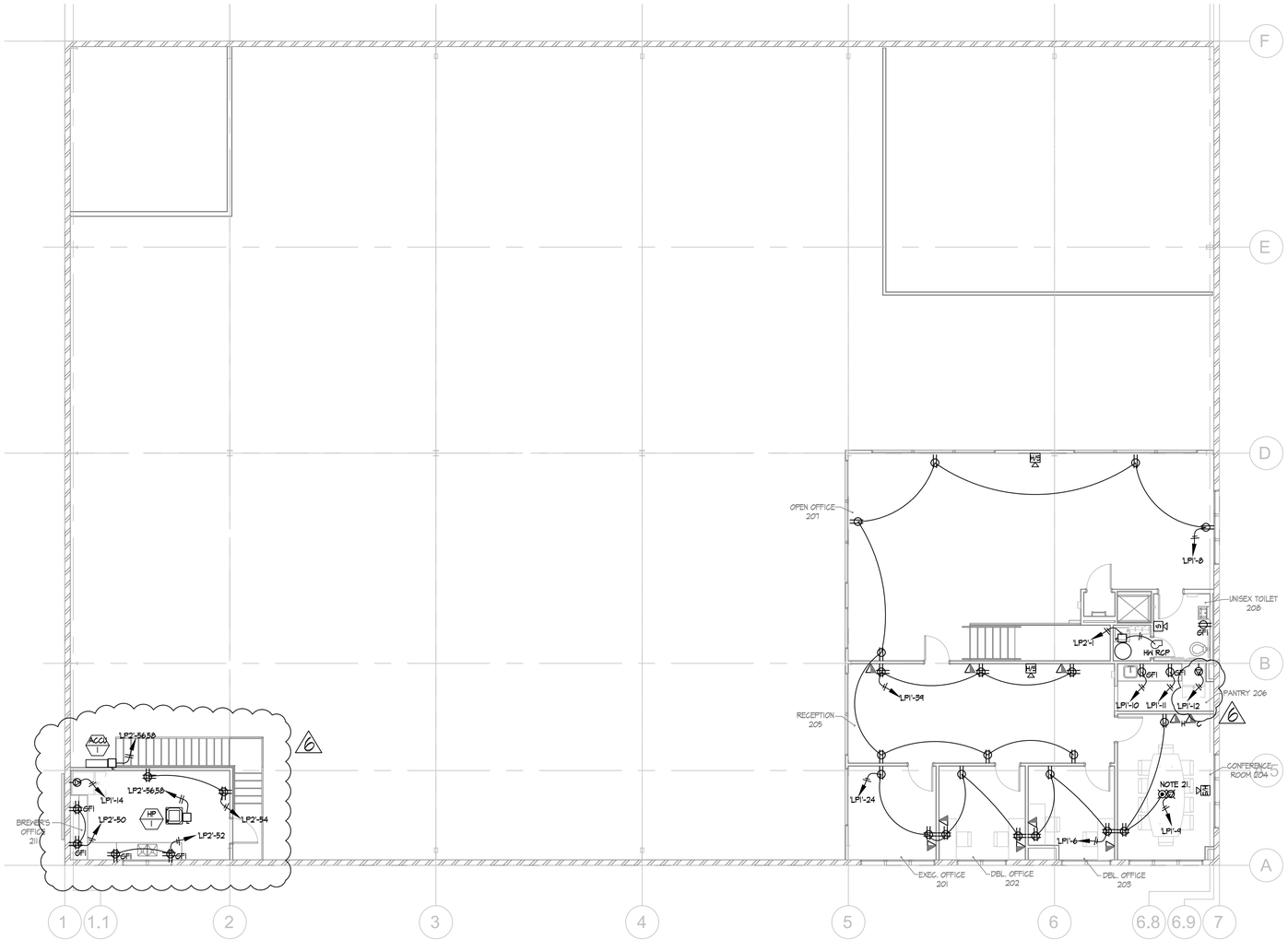

UPPER LEVEL POWER NEW WORK PLAN
SCALE: 1/8"=1'-0"

POWER & FIRE ALARM NOTES:

1. ALL WORK SHALL BE IN COMPLIANCE WITH THE 2014 NEC.
2. ELECTRICAL CONTRACTOR SHALL COORDINATE LOCATION OF PANEL WITH OTHER TRADES TO MAINTAIN DEDICATED ELECTRICAL SPACE ABOVE PANEL IN ACCORDANCE WITH NEC.
3. PROVIDE DEDICATED NEUTRALS FOR ALL CIRCUITS.
4. ALL ELECTRICAL PANELS SHALL BE FULLY RATED.
5. ALL WIRING SHALL BE THHN/THWN COPPER, MINIMUM 12 AWG UNLESS OTHERWISE NOTED.
6. ALL ELECTRICAL RECEPTACLES TO BE MOUNTED AT 18" AFF UNLESS OTHERWISE NOTED.
7. ALL WIRING SHALL BE TYPE MC WITH INSULATED GROUND.
8. THE E.C. SHALL REFER TO THE ARCHITECTURAL DRAWINGS FOR FINAL HEIGHT OF ALL RECEPTACLES AND DATA OUTLETS.
9. E.C. SHALL SHALL PROVIDE JUNCTION BOX WITH PULL STRING TO BUILDING INTERIOR TO FACILITATE WIRE PULL (BY OTHERS) FOR SECURITY CAMERA.
10. E.C. SHALL SHALL PROVIDE 120V POWER TO NEMA 5R JUNCTION BOX AT PATIO. REFER TO SITE/CIVIL DRAWINGS.
11. PROVIDE (2) 4" SCH. 80 PVC CONDUITS FROM ELECTRICAL ROOM TO UTILITY POLE, PROVIDE PULL STRING IN PIPE AND CAP EACH END FOR FUTURE WIRE PULL.
12. E.C. SHALL PROVIDE 20A-3Ø RECEPTACLE FOR FORKLIFT CHARGER.
13. E.C. SHALL PROVIDE 120V POWER TO MOTORIZED ROLLING DOOR. VERIFY FINAL POWER REQUIREMENTS WITH OWNER PRIOR TO CONSTRUCTION.
14. (4) #500 KCMIL CU COND. IN 3" EMT FROM UTILITY POLE.
15. E.C. SHALL PROVIDE ROUGH-IN FOR NEW CARD READER, PROVIDE ALL REQUIRED LINE AND LOW VOLTAGE WIRING AS REQUIRED, COORDINATE WIRING REQUIREMENTS WITH SECURITY VENDOR.
16. E.C. SHALL WIRE ALL WATERFLOW & TAMPER SWITCHES AT DOUBLE CHECK DETECTOR ASSEMBLY, FLOOR CONTROL VALVES AND VALVES SERVING ELEVATOR HOISTWAY BACK TO BUILDING FIRE ALARM PANEL, REFER TO SPRINKLER CONTRACTOR DRAWINGS FOR ALL LOCATIONS.
17. E.C. SHALL PROVIDE ROUGH-IN FOR NEW SPEAKER, PROVIDE ALL REQUIRED LINE AND LOW VOLTAGE WIRING AS REQUIRED, COORDINATE WIRING REQUIREMENTS WITH OWNER.
18. E.C. SHALL PROVIDE CIRCUIT FOR WALK-IN REFRIGERATOR CONDENSING UNIT, COORDINATE POWER REQUIREMENTS AND LOCATION WITH EQUIPMENT VENDOR.
19. E.C. SHALL PROVIDE CIRCUIT FOR WALK-IN REFRIGERATOR EVAPORATOR, COORDINATE POWER REQUIREMENTS AND LOCATION WITH EQUIPMENT VENDOR.
20. SERVICE RECEPTACLE PROVIDED WITH EQUIPMENT AND WIRED FROM LINE SIDE OF SERVICE DISCONNECT SWITCH.
21. FINAL LOCATION OF FLOOR BOX TO BE COORDINATED WITH FURNITURE VENDOR.
22. THE GRAIN STORAGE/MILL ROOM IS CLASSIFIED AS CLASS II, DIVISION 2, GROUP G. ALL WIRING, FITTINGS, SWITCHES, RECEPTACLES, LIGHTING, ETC. SHALL BE DUST TIGHT IN COMPLIANCE WITH THE APPLICABLE SECTIONS OF ARTICLE 502 OF THE 2014 NEC.
23. E.C. SHALL COORDINATE POWER REQUIREMENT FOR CONTROL PANEL IN MILL AREA WITH EQUIPMENT VENDOR.
24. WIRING METHOD IN BREWHOUSE SHALL COMPLY WITH NEC 300.6(D) FOR INDOOR WET LOCATIONS.
25. E.C. SHALL PROVIDE DEDICATED RECEPTACLE FOR DUST COLLECTION SYSTEM.
26. FAN PROVIDED WITH MANUFACTURER NON-FUSED DISCONNECT SWITCH, NEMA 1, 20A, 120V-1Ø.

ELECTRICAL LEGEND

"X" DUPLEX RECEPTACLE 120V, "X" ABOVE FINISHED FLOOR	WP WEATHERPROOF SINGLE POLE SWITCH
DOUBLE DUPLEX RECEPTACLE 120V	ELECTRICAL PANEL
GFI GROUND FAULT DUPLEX RECEPTACLE	CR DOOR ENTRY CARD READER, HARDWARE TO BE FURNISHED AND INSTALLED BY OTHER, ALL WIRING BY E.C.
208V RECEPTACLE	JB JUNCTION BOX
DEDICATED 120V-20A RECEPTACLE "X" ABOVE FINISHED FLOOR	DISCONNECT SWITCH
HARDWIRE CIRCUIT	DATA/TEL OUTLET
WP GFI WATER-PROOF GROUND FAULT DUPLEX RECEPTACLE	H HDMI OUTLET
FLOOR MOUNTED (FLUSH) FULLY ADJUSTABLE, HUBBELL SYSTEM ONE 4X4 FLOOR BOX WITH TRIM (4) RECEPTACLES & (4) DATA PORTS	C COAX CABLE OUTLET (RG6)
S SPEAKER	1P BREAKER FEED W/CIRCUIT & PANEL
WEATHERPROOF SERVICE LIGHT STONCO 2V622 WITH (2) LED, 5000K, 120 LUMENS, 15W LAMPS	2P BREAKER FEED W/CIRCUIT & PANEL
	3P BREAKER FEED W/CIRCUIT & PANEL

FIRE ALARM SYMBOL KEY

FACP	FIRE ALARM CONTROL PANEL
H/S	ADA HORN/STROBE-80" A.F.F. SELECTABLE OUTPUT PROVIDE SYNCHRONIZATION MODULE
S	ADA STROBE ONLY SELECTABLE OUTPUT
SD	SMOKE DETECTOR NOTIFIER PHOTOELECTRIC TYPE
SD	DUCT SMOKE DETECTOR WITH SAMPLING TUBE
CO	CARBON MONOXIDE DETECTOR SYSTEM SENSOR MODEL CO1224TRR WITH MONITOR MODULE
	CAMERA

CABLE SCHEDULE:

ALL WIRING SHALL BE TWISTED SHIELDED PAIR APPROVED FIRE ALARM CABLE (FPPL) #14AWG OR #16AWG AS RECOMMENDED BY MANUFACTURER BASED ON DISTANCE

NOTES:

1. THE FIRE ALARM CONTRACTOR IS RESPONSIBLE FOR PROVIDING ALL REQUIRED, EQUIPMENT CUT SHEETS, BATTERY CALCULATIONS, VOLTAGE DROP CALCULATIONS, ETC. ASSOCIATED WITH THE FIRE ALARM SYSTEM.

studio 1200, LLC
511 MILLBURN AVENUE
SHORT HILLS, NJ 07078
973.376.5111
973.376.5011
www.studio1200.com
CERITFICATE OF AUTHORIZATION # AC-710

Nancy Dougherty, AIA, LEED
NJ-AI 14861/NY-025099/CT-ARI.0011798

MEP CONSULTANT:
Roxbury Engineering Associates, L.L.C.
3 Gold Mine Road
Flanders, NJ 07836
Phone: (973) 252-6973
Fax: (973) 252-7028
COA: 24GA28096600
Rick Macieko, PE
NJ PE: 37111 USVI PE: 0-4263-1B
NY PE: 087618 MD PE: 50005
PA PE: 0777177 CT PE: 32573

REA PROJECT NO. 18-1451

STATE OF NEW JERSEY RICHARD MACIEKO No. GE37111 PROFESSIONAL ENGINEER

NO	ISSUE	DATE
1	ISSUED FOR BID & PERMIT	10/24/18
2	NJSEA PERMIT REVIEW	12/4/18
3	REVISED PER NJSEA COMMENTS	01/02/19
4	REVISED PER DUST COLLECTION RECEP. & MILL AREA EXHAUST	01/24/19
5	REVISED PER NJSEA COMMENTS	02/07/19
6	CONTRACT CONFORMANCE SET	02/20/19

BOLERO SNORT BREWERY
316 20TH STREET
CARLSTADT, NJ

UPPER LEVEL POWER NEW WORK PLAN

E1.1

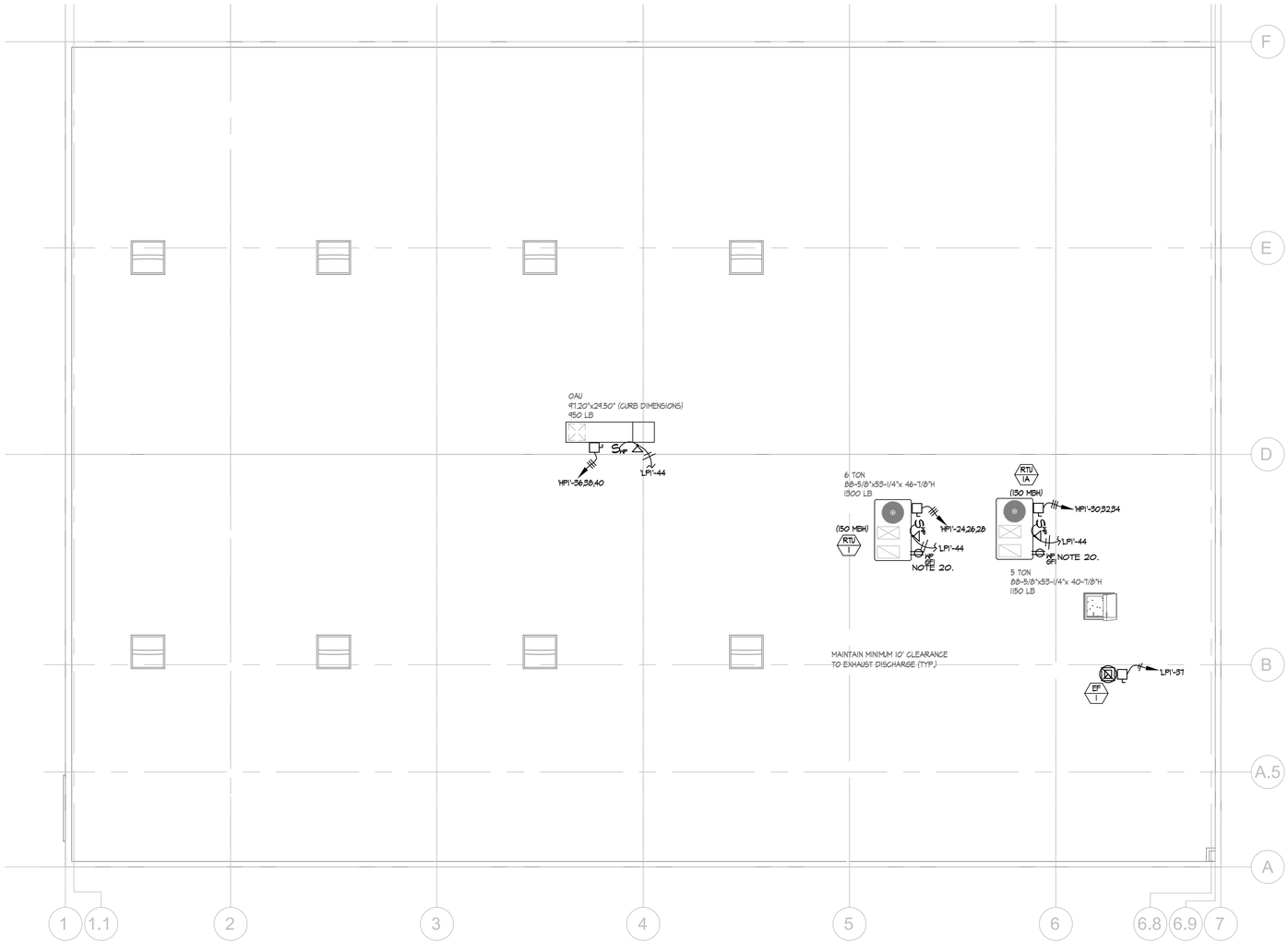

ROOF POWER NEW WORK PLAN
SCALE: 1/8"=1'-0"

POWER & FIRE ALARM NOTES:

1. ALL WORK SHALL BE IN COMPLIANCE WITH THE 2014 NEC.
2. ELECTRICAL CONTRACTOR SHALL COORDINATE LOCATION OF PANEL WITH OTHER TRADES TO MAINTAIN DEDICATED ELECTRICAL SPACE ABOVE PANEL IN ACCORDANCE WITH NEC.
3. PROVIDE DEDICATED NEUTRALS FOR ALL CIRCUITS.
4. ALL ELECTRICAL PANELS SHALL BE FULLY RATED.
5. ALL WIRING SHALL BE THHN/THWN COPPER, MINIMUM 12 AWG UNLESS OTHERWISE NOTED.
6. ALL ELECTRICAL RECEPTACLES TO BE MOUNTED AT 18" AFF UNLESS OTHERWISE NOTED.
7. ALL WIRING SHALL BE TYPE MC WITH INSULATED GROUND.
8. THE E.C. SHALL REFER TO THE ARCHITECTURAL DRAWINGS FOR FINAL HEIGHT OF ALL RECEPTACLES AND DATA OUTLETS.
9. E.C. SHALL SHALL PROVIDE JUNCTION BOX WITH PULL STRING TO BUILDING INTERIOR TO FACILITATE WIRE PULL (BY OTHERS) FOR SECURITY CAMERA.
10. E.C. SHALL SHALL PROVIDE 120V POWER TO NEMA 5R JUNCTION BOX AT PATIO. REFER TO SITE/CIVIL DRAWINGS.
11. PROVIDE (2) 4" SCH. 80 PVC CONDUITS FROM ELECTRICAL ROOM TO UTILITY POLE, PROVIDE PULL STRING IN PIPE AND CAP EACH END FOR FUTURE WIRE PULL.
12. E.C. SHALL PROVIDE 20A-3Ø RECEPTACLE FOR FORKLIFT CHARGER.
13. E.C. SHALL PROVIDE 120V POWER TO MOTORIZED ROLLING DOOR. VERIFY FINAL POWER REQUIREMENTS WITH OWNER PRIOR TO CONSTRUCTION.
14. (4) #500 KCMIL CU COND. IN 3" EMT FROM UTILITY POLE.
15. E.C. SHALL PROVIDE ROUGH-IN FOR NEW CARD READER. PROVIDE ALL REQUIRED LINE AND LOW VOLTAGE WIRING AS REQUIRED, COORDINATE WIRING REQUIREMENTS WITH SECURITY VENDOR.
16. E.C. SHALL WIRE ALL WATERFLOW & TAMPER SWITCHES AT DOUBLE CHECK DETECTOR ASSEMBLY, FLOOR CONTROL VALVES AND VALVES SERVING ELEVATOR HOISTWAY BACK TO BUILDING FIRE ALARM PANEL, REFER TO SPRINKLER CONTRACTOR DRAWINGS FOR ALL LOCATIONS.
17. E.C. SHALL PROVIDE ROUGH-IN FOR NEW SPEAKER, PROVIDE ALL REQUIRED LINE AND LOW VOLTAGE WIRING AS REQUIRED, COORDINATE WIRING REQUIREMENTS WITH OWNER.
18. E.C. SHALL PROVIDE CIRCUIT FOR WALK-IN REFRIGERATOR CONDENSING UNIT, COORDINATE POWER REQUIREMENTS AND LOCATION WITH EQUIPMENT VENDOR.
19. E.C. SHALL PROVIDE CIRCUIT FOR WALK-IN REFRIGERATOR EVAPORATOR, COORDINATE POWER REQUIREMENTS AND LOCATION WITH EQUIPMENT VENDOR.
20. SERVICE RECEPTACLE PROVIDED WITH EQUIPMENT AND WIRED FROM LINE SIDE OF SERVICE DISCONNECT SWITCH.
21. FINAL LOCATION OF FLOOR BOX TO BE COORDINATED WITH FURNITURE VENDOR.
22. THE GRAIN STORAGE/MILL ROOM IS CLASSIFIED AS CLASS II, DIVISION 2, GROUP G. ALL WIRING, FITTINGS, SWITCHES, RECEPTACLES, LIGHTING, ETC. SHALL BE DUST TIGHT IN COMPLIANCE WITH THE APPLICABLE SECTIONS OF ARTICLE 502 OF THE 2014 NEC.
23. E.C. SHALL COORDINATE POWER REQUIREMENT FOR CONTROL PANEL IN MILL AREA WITH EQUIPMENT VENDOR.
24. WIRING METHOD IN BREWHOUSE SHALL COMPLY WITH NEC 300.6(D) FOR INDOOR WET LOCATIONS.
25. E.C. SHALL PROVIDE DEDICATED RECEPTACLE FOR DUST COLLECTION SYSTEM.
26. FAN PROVIDED WITH MANUFACTURER NON-FUSED DISCONNECT SWITCH, NEMA 1, 20A, 120V-1Ø.

ELECTRICAL LEGEND

"X"	DUPLEX RECEPTACLE 120V, "X" ABOVE FINISHED FLOOR	WP	WEATHERPROOF SINGLE POLE SWITCH
	DOUBLE DUPLEX RECEPTACLE 120V		ELECTRICAL PANEL
GFI	GROUND FAULT DUPLEX RECEPTACLE	CR	DOOR ENTRY CARD READER, HARDWARE TO BE FURNISHED AND INSTALLED BY OTHER, ALL WIRING BY E.C.
	208V RECEPTACLE		JUNCTION BOX
	DEDICATED 120V-20A RECEPTACLE "X" ABOVE FINISHED FLOOR		DISCONNECT SWITCH
	HARDWIRE CIRCUIT		DATA/TEL OUTLET
WP GFI	WATER-PROOF GROUND FAULT DUPLEX RECEPTACLE	H	HDMI OUTLET
	FLOOR MOUNTED (FLUSH) FULLY ADJUSTABLE HUBBELL SYSTEM ONE 4X4 FLOOR BOX WITH TRIM (4) RECEPTACLES & (4) DATA PORTS	C	COAX CABLE OUTLET (RG6)
S	SPEAKER		1P BREAKER FEED W/CIRCUIT & PANEL
	WEATHERPROOF SERVICE LIGHT STONCO 2V622 WITH (2) LED, 5000K, 120 LUMENS, 15W LAMPS		2P BREAKER FEED W/CIRCUIT & PANEL
			3P BREAKER FEED W/CIRCUIT & PANEL

FIRE ALARM SYMBOL KEY

FACP	FIRE ALARM CONTROL PANEL
H/S	ADA HORN/STROBE-80" A.F.F. SELECTABLE OUTPUT PROVIDE SYNCHRONIZATION MODULE
S	ADA STROBE ONLY SELECTABLE OUTPUT
SD	SMOKE DETECTOR NOTIFIER PHOTOELECTRIC TYPE
SD D	DUCT SMOKE DETECTOR WITH SAMPLING TUBE
CO	CARBON MONOXIDE DETECTOR SYSTEM SENSOR MODEL CO1224TRR WITH MONITOR MODULE
	CAMERA

CABLE SCHEDULE:

ALL WIRING SHALL BE TWISTED SHIELDED PAIR APPROVED FIRE ALARM CABLE (FPPL) #14AWG OR #16AWG AS RECOMMENDED BY MANUFACTURER BASED ON DISTANCE

NOTES:

1. THE FIRE ALARM CONTRACTOR IS RESPONSIBLE FOR PROVIDING ALL REQUIRED, EQUIPMENT CUT SHEETS, BATTERY CALCULATIONS, VOLTAGE DROP CALCULATIONS, ETC. ASSOCIATED WITH THE FIRE ALARM SYSTEM.

studio 1200, LLC
511 MILLBURN AVENUE
SHORT HILLS, NJ 07078
973.376.5111
973.376.5011
www.studio1200.com
CERITFICATE OF AUTHORIZATION # AC-710

Nancy Dougherty, AIA, LEED
NJ-AI 14861/NY-025099/CT-ARI.0011798

MEP CONSULTANT:
Oxbury Engineering Associates, L.L.C.
3 Gold Mine Road
Flanders, NJ 07836
Phone: (973) 252-6973
Fax: (973) 252-7028
COA: 24GA28096600
Rick Macieko, PE
NJ PE: 37111 USVI PE: 0-4263-1B
NY PE: 087618 MD PE: 50005
PA PE: 0777177 CT PE: 32573

REA PROJECT NO. 18-1451

NO	ISSUE	DATE
1	ISSUED FOR BID & PERMIT	10/24/18
2	NJSEA PERMIT REVIEW	12/4/18
3	REVISED PER NJSEA COMMENTS	01/02/19
4	REVISED PER DUST COLLECTION RECEP. & MILL AREA EXHAUST	01/24/19
5	REVISED PER NJSEA COMMENTS	02/07/19
6	CONTRACT CONFORMANCE SET	02/20/19

BOLERO SNORT BREWERY
316 20TH STREET
CARLSTADT, NJ

ROOF POWER NEW WORK PLAN

E1.2

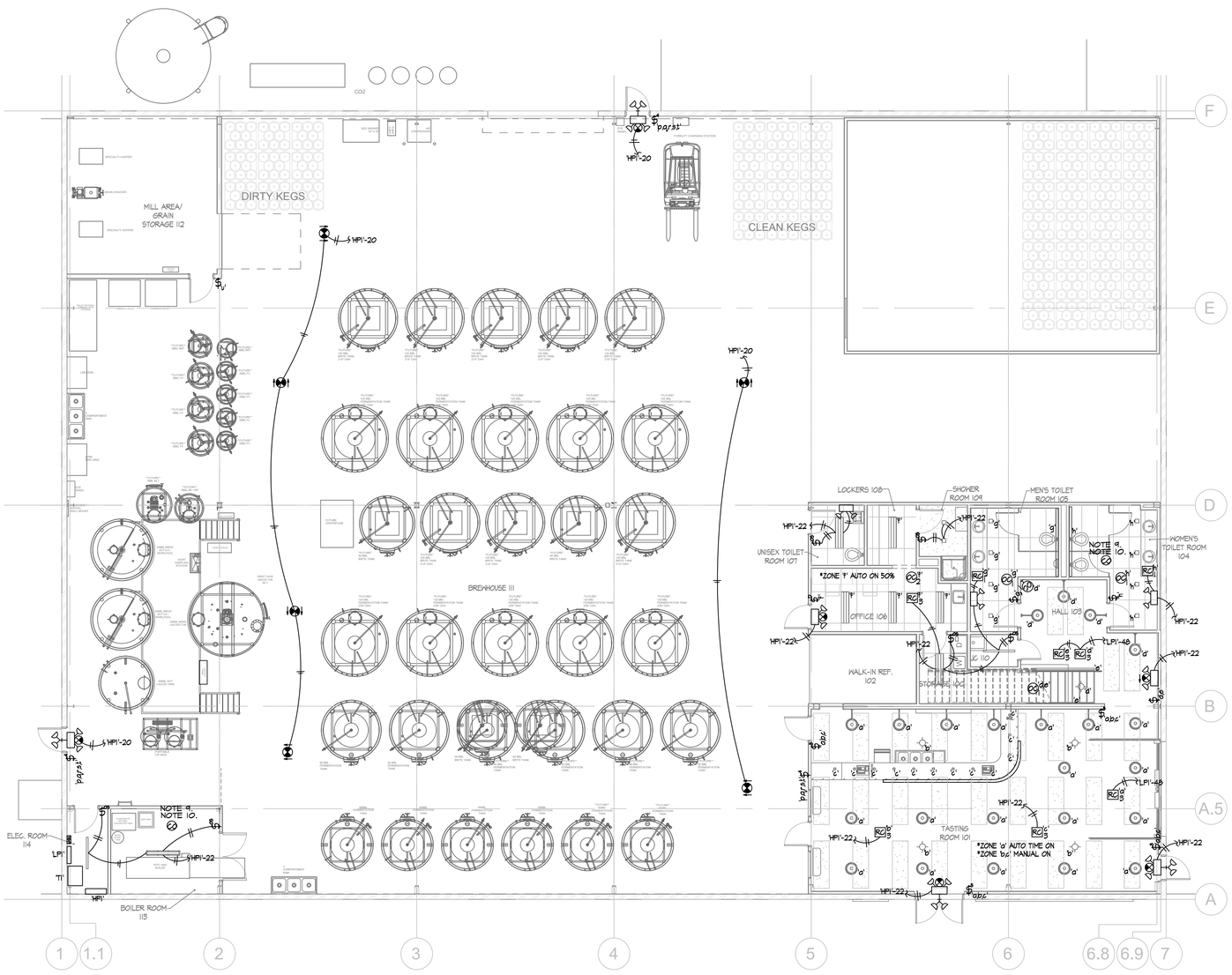

MAIN LEVEL LIGHTING NEW WORK PLAN
SCALE: 1/8"=1'-0"

LIGHTING NOTES:

1. ELECTRICAL CONTRACTOR IS RESPONSIBLE FOR INSTALLING AND REMOVING ALL TEMPORARY LIGHTING REQUIRED FOR CONSTRUCTION.
2. ALL LIGHTING SHALL BE LED AND ALL DIMMER SWITCHES SHALL BE TESTED AND VERIFIED COMPATIBLE WITH LED FIXTURE DRIVER.
3. CONTRACTOR SHALL VERIFY ALL MOUNTING CONDITIONS AND COORDINATE LIGHTING INSTALLATION WITH THE OTHER TRADES.
4. ALL RECESSED FIXTURES SHALL BE EQUIPPED WITH EARTHQUAKE CLIPS WHERE APPLICABLE.
5. ALL EMERGENCY AND EXIT LIGHTING SHALL BE CAPABLE OF PROVIDING ILLUMINATION FOR A MINIMUM OF 90 MINUTES.
6. NA
7. LIGHT SWITCH TO CONTROL SERVICE LIGHT ABOVE WALK IN REFRIGERATOR. FINAL LOCATION OF LIGHT SWITCH TO BE COORDINATED WITH OWNER.
8. EXTERIOR LIGHTS SHALL BE CONTROLLED BY PHOTO-CELL.
9. PROVIDE CO DETECTOR AS INDICATED, REQUIRED LOCATIONS ARE AS FOLLOWS: IN THE IMMEDIATE VICINITY OF ANY SHAFT, STAIRWELL, ELEVATOR SHAFT AT THE LEVEL OF A POTENTIAL SOURCE OF CARBON MONOXIDE AND AT THE FIRST AIR OUTLET FROM HVAC EQUIPMENT THAT IS A POTENTIAL SOURCE OF CARBON MONOXIDE.
10. E.C. SHALL PROVIDE 24V CO DETECTOR WIRED THROUGH BUILDING FACP, PROVIDE ALL REQUIRED MONITOR MODULES, PROGRAMMING ETC.
11. ALL TYPE LF-1 LIGHTS ARE SEALED, GASKETED FIXTURES AND SUITABLE FOR DIVISION 2, CLASS 2 LOCATIONS..

LIGHTING SYMBOL LIST

$	SINGLE POLE SWITCH- LINE VOLTAGE
$3	3-WAY SINGLE POLE SWITCH- LINE VOLTAGE
$4	4-WAY SINGLE POLE SWITCH- LINE VOLTAGE
$5	5-WAY SINGLE POLE SWITCH- LINE VOLTAGE
$D	SINGLE POLE SWITCH WITH 0-10V DIMMER
$OS	SINGLE POLE SWITCH WITH OCCUPANCY SENSOR
$OSD	SINGLE POLE SWITCH WITH OCCUPANCY SENSOR & 0-10V DIMMER
$3D	3-WAY SWITCH WITH 0-10V LED DIMMER
$WP	SINGLE POLE WATERPROOF SWITCH
'NL'	DENOTES FIXTURE TO BE WIRED TO NON-SWITCHED POWER
'EM'	DENOTES LIGHT FIXTURE TO BE PROVIDED WITH BATTERY BACK-UP
OS	LMJC-100-2, 24VDC 20mA, ULTRASONIC CEILING SENSOR
OS2	LMDC-100, 24VDC 20mA, DUAL TECHNOLOGY CEILING SENSOR
OS5	LMPC-100-5, 24VDC 7mA, PIR CEILING SENSOR EXTENDED HEIGHT LENS
VS	LMDC-100, 24VDC 20mA, DUAL TECHNOLOGY CEILING SENSOR
CS	LMDV-100, 24VDC 20mA, DUAL TECHNOLOGY CORNER MOUNT SENSOR
RC1	LMRC-101 120/277 VAC 1-RELAY ON/OFF ROOM CONTROLLER
RC1 5	LMRC-211 120/277 VAC 1-RELAY ON/OFF 0-10V DIMMING ROOM CONTROLLER
RC2 4	LMRC-212 120/277 VAC 2-RELAY ON/OFF 0-10V DIMMING ROOM CONTROLLER
OS	LMLS-600, 24VDC 7mA, SINGLE ZONE ON/OFF SKYLIGHT PHOTOSENSOR
LMZC	LMZC-301, 120/277 VAC, ZONE CONTROLLER WITH ENCLOSURE
	EXIT LIGHT LITHONIA EDG-1-R-EL LED DUAL VOLTAGE SELF-POWERED RED LETTERS ARROW INDICATES DIRECTION OF TRAVEL
	EMERGENCY LIGHTING DUAL HEAD BACK-UP BATTERY UNIT-120/277V LITHONIA QUANTUM ELM2 LED (9.6V) 4.4W INPUT
*	COMBINATION EMERGENCY LIGHTING DUAL HEAD/EXIT SIGN BACK-UP BATTERY UNIT -120/277V LITHONIA QUANTUM LHQM LED (9.6V) 4.5W INPUT
	* DENOTES HIGH CAPACITY BATTERY FOR POWERING REMOTE HEADS
	DUAL HEAD REMOTE LIGHTING HEADS LITHONIA ELATG (2) (9.6V) 1.5W LED LAMPS

LIGHTING SCHEDULE

LF-1	WILLIAMS EGL2 SERIES 1'x4' 22.5W
LF-2	LSI ABOLITE LED STANDARD DOME 11W WITH GOOSENECK WALL BRACKET-120-240V
LF-3	LSI ABOLITE LED STANDARD DOME 11W-120-240V
LF-4	WILLIAMS LT-14-L47/835-AF-DIM-UNV 40.0W
LF-5A	FOCAL POINT LED DOWNLIGHT FLC33D-50-400L-LD 15W
LF-5B	FOCAL POINT LED DOWNLIGHT FLC33D-50-400L-LD 15W
LF-6	FOCAL POINT RECESSED LED FSM4L-FL2-375LF-35K-IC-UNV-LDI 16W
LF-7	FOCAL POINT SUSPENDED LED FSM15-FL-375LF-35K-IC-UNV-LDI 15W
LF-8	WAC LIGHTING R3BRDP-N-930-WT 11W
LF-9A	MERCURY LIGHTING LW4-4-2100-35K-1-UNI 18W
LF-9B	MERCURY LIGHTING LW4-2-2100-35K-HTA-1-UNI 18W
LF-10	WILLIAMS 96-4-L62-840-HIAFR-DIM-UNV 75W
LF-11	FOCAL POINT CYLINDER PENDANT FLCY4-RD-2000L-35K-LII-CT2-UNV 27W
LF-12	BASIS OF DESIGN 10W
LF-13	WAC LIGHTING LED STRIP LED-TX24-35-WT (LED LIGHT UNDER HANDRAIL)

studio 1200, LLC
511 MILLBURN AVENUE
SHORT HILLS, NJ 07078
973.376.5111
973.376.5011
www.studio1200.com
CERITFICATE OF AUTHORIZATION # AC-710

Nancy Dougherty, AIA, LEED
NJ-AI 14861/NY-025099/CT-ARI.0011798

MEP CONSULTANT:
Roxbury Engineering Associates, L.L.C.
3 Gold Mine Road
Flanders, NJ 07836
Phone: (973) 252-6973
Fax: (973) 252-7028
COA: 24GA28096600
Rick Macieko, PE
NJ PE: 37111 USVI PE: 0-4263-1B
NY PE: 087618 MD PE: 50005
PA PE: 0777177 CT PE: 32573

REA PROJECT NO. 18-1451

NO	ISSUE	DATE
1	ISSUED FOR BID & PERMIT	10/24/18
2	NJSEA PERMIT REVIEW	12/4/18
3	REVISED PER NJSEA COMMENTS	01/02/19
4	REVISED PER DUST COLLECTION RECEP. & MILL AREA EXHAUST	01/24/19
5	REVISED PER NJSEA COMMENTS	02/07/19
6	CONTRACT CONFORMANCE SET	02/20/19

BOLERO SNORT BREWERY
316 20TH STREET
CARLSTADT, NJ

MAIN LEVEL LIGHTING
NEW WORK PLAN

E2.0

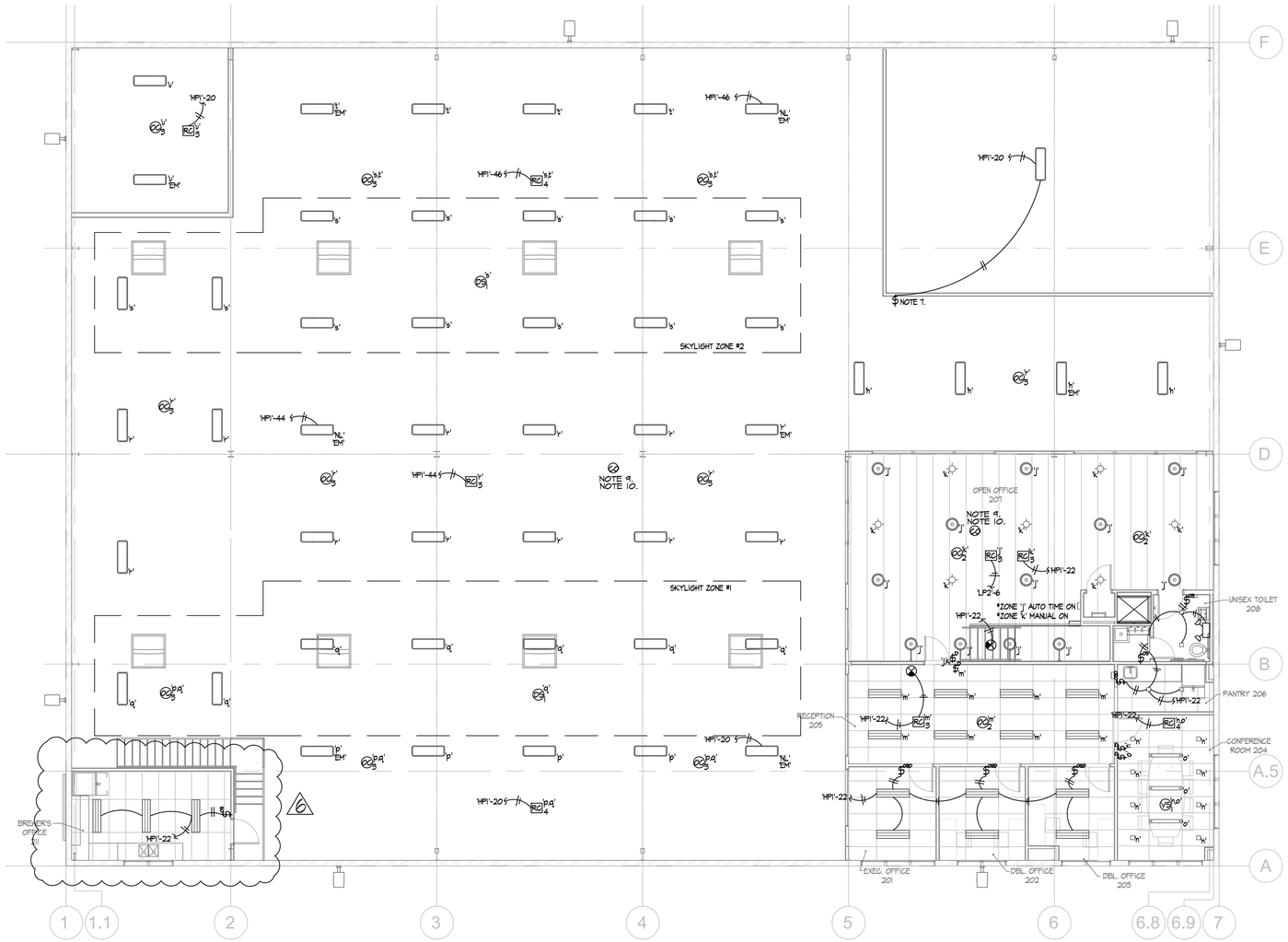

UPPER LEVEL LIGHTING NEW WORK PLAN
SCALE: 1/8"=1'-0"

LIGHTING NOTES:

1. ELECTRICAL CONTRACTOR IS RESPONSIBLE FOR INSTALLING AND REMOVING ALL TEMPORARY LIGHTING REQUIRED FOR CONSTRUCTION.
2. ALL LIGHTING SHALL BE LED AND ALL DIMMER SWITCHES SHALL BE TESTED AND VERIFIED COMPATIBLE WITH LED FIXTURE DRIVER.
3. CONTRACTOR SHALL VERIFY ALL MOUNTING CONDITIONS AND COORDINATE LIGHTING INSTALLATION WITH THE OTHER TRADES.
4. ALL RECESSED FIXTURES SHALL BE EQUIPPED WITH EARTHQUAKE CLIPS WHERE APPLICABLE.
5. ALL EMERGENCY AND EXIT LIGHTING SHALL BE CAPABLE OF PROVIDING ILLUMINATION FOR A MINIMUM OF 90 MINUTES.
6. NA
7. LIGHT SWITCH TO CONTROL SERVICE LIGHT ABOVE WALK IN REFRIGERATOR. FINAL LOCATION OF LIGHT SWITCH TO BE COORDINATED WITH OWNER.
8. EXTERIOR LIGHTS SHALL BE CONTROLLED BY PHOTO-CELL.
9. PROVIDE CO DETECTOR AS INDICATED, REQUIRED LOCATIONS ARE AS FOLLOWS: IN THE IMMEDIATE VICINITY OF ANY SHAFT, STAIRWELL, ELEVATOR SHAFT AT THE LEVEL OF A POTENTIAL SOURCE OF CARBON MONOXIDE AND AT THE FIRST AIR OUTLET FROM HVAC EQUIPMENT THAT IS A POTENTIAL SOURCE OF CARBON MONOXIDE.
10. E.C. SHALL PROVIDE 24V CO DETECTOR WIRED THROUGH BUILDING FACP, PROVIDE ALL REQUIRED MONITOR MODULES, PROGRAMMING ETC.
11. ALL TYPE LF-1 LIGHTS ARE SEALED, GASKETED FIXTURES AND SUITABLE FOR DIVISION 2, CLASS 2 LOCATIONS..

LIGHTING SYMBOL LIST

	SINGLE POLE SWITCH- LINE VOLTAGE
	3-WAY SINGLE POLE SWITCH- LINE VOLTAGE
	4-WAY SINGLE POLE SWITCH- LINE VOLTAGE
	5-WAY SINGLE POLE SWITCH- LINE VOLTAGE
	SINGLE POLE SWITCH WITH 0-10V DIMMER
	SINGLE POLE SWITCH WITH OCCUPANCY SENSOR
	SINGLE POLE SWITCH WITH OCCUPANCY SENSOR & 0-10V DIMMER
	3-WAY SWITCH WITH 0-10V LED DIMMER
	SINGLE POLE WATERPROOF SWITCH
'NL'	DENOTES FIXTURE TO BE WIRED TO NON-SWITCHED POWER
'EM'	DENOTES LIGHT FIXTURE TO BE PROVIDED WITH BATTERY BACK-UP
	LMLC-100-2, 24VDC 20mA, ULTRASONIC CEILING SENSOR
	LMDC-100, 24VDC 20mA, DUAL TECHNOLOGY CEILING SENSOR
	LMPC-100-5, 24VDC 7mA, PIR CEILING SENSOR EXTENDED HEIGHT LENS
	LMDC-100, 24VDC 20mA, DUAL TECHNOLOGY CEILING SENSOR
	LMDX-100, 24VDC 20mA, DUAL TECHNOLOGY CORNER MOUNT SENSOR
RC	LMRC-101 120/277 VAC 1-RELAY ON/OFF ROOM CONTROLLER
RC	LMRC-211 120/277 VAC 1-RELAY ON/OFF 0-10V DIMMING ROOM CONTROLLER
RC	LMRC-212 120/277 VAC 2-RELAY ON/OFF 0-10V DIMMING ROOM CONTROLLER
	LMLS-600, 24VDC 7mA, SINGLE ZONE ON/OFF SKYLIGHT PHOTOSENSOR
LMZC	LMZC-301, 120/277 VAC, ZONE CONTROLLER WITH ENCLOSURE
	EXIT LIGHT LITHONIA EDG-1-R-EL LED DUAL VOLTAGE SELF-POWERED RED LETTERS ARROW INDICATES DIRECTION OF TRAVEL
	EMERGENCY LIGHTING DUAL HEAD BACK-UP BATTERY UNIT-120/277V LITHONIA QUANTUM ELM2 LED (9.6V) 4.9W INPUT
*	COMBINATION EMERGENCY LIGHTING DUAL HEAD/EXIT SIGN BACK-UP BATTERY UNIT -120/277V LITHONIA QUANTUM LHQM LED (9.6V) 4.3W INPUT * DENOTES HIGH CAPACITY BATTERY FOR POWERING REMOTE HEADS
	DUAL HEAD REMOTE LIGHTING HEADS LITHONIA ELATG (2) (9.6V) 15W LED LAMPS

LIGHTING SCHEDULE

LF-1	WILLIAMS EGL2 SERIES 1'x4' 22.5W
LF-2	LSI ABOLITE LED STANDARD DOME 11W WITH GOOSENECK WALL BRACKET-120-240V
LF-3	LSI ABOLITE LED STANDARD DOME 11W-120-240V
LF-4	WILLIAMS LT-14-L47/835-AF-DIM-UNV 40.0W
LF-5A	FOCAL POINT LED DOWNLIGHT FLC33D-50-400L-LD 15W
LF-5B	FOCAL POINT LED DOWNLIGHT FLC33D-50-400L-LD 15W
LF-6	FOCAL POINT RECESSED LED FSM4L-FL2-575LF-35K-IC-UNV-LDI 16W
LF-7	FOCAL POINT SUSPENDED LED FSM13-FL-375LF-35K-IC-UNV-LDI 15W
LF-8	WAC LIGHTING R3BRDP-N-930-WT 11W
LF-9A	MERCURY LIGHTING LW4-4-2100-35K-1-UNI 18W
LF-9B	MERCURY LIGHTING LW4-2-2100-35K-HTA-1-UNI 18W
LF-10	WILLIAMS 46-4-L62-840-HIAFR-DIM-UNV 73W
LF-11	FOCAL POINT CYLINDER PENDANT FLCY4-RD-2000L-35K-LII-CT2-UNV 27W
LF-12	BASIS OF DESIGN 10W
LF-13	WAC LIGHTING LED STRIP LED-TX24-35-WT (LED LIGHT UNDER HANDRAIL)

studio 1200, LLC
511 MILLBURN AVENUE
SHORT HILLS, NJ 07078
973.376.5111
973.376.5011
www.studio1200.com
CERITFICATE OF AUTHORIZATION # AC-710

Nancy Dougherty, AIA, LEED
NJ-AI 14861/NY-025099/CT-ARI.0011798

MEP CONSULTANT:
Roxbury Engineering Associates, L.L.C.
3 Gold Mine Road
Flanders, NJ 07836
Phone: (973) 252-6973
Fax: (973) 252-7028
COA: 24GA28096600
Rick Macieko, PE
NJ PE: 37111 USVI PE: 0-4263-1B
NY PE: 087618 MD PE: 50005
PA PE: 077177 CT PE: 32573

REA PROJECT NO. 18-1451

STATE OF NEW JERSEY RICHARD MACIEKO No. GE37111 PROFESSIONAL ENGINEER

NO	ISSUE	DATE
1	ISSUED FOR BID & PERMIT	10/24/18
2	NJSEA PERMIT REVIEW	12/4/18
3	REVISED PER NJSEA COMMENTS	01/02/19
4	REVISED PER DUST COLLECTION RECEP. & MILL AREA EXHAUST	01/24/19
5	REVISED PER NJSEA COMMENTS	02/07/19
6	CONTRACT CONFORMANCE SET	02/20/19

BOLERO SNORT BREWERY
316 20TH STREET
CARLSTADT, NJ

UPPER LEVEL LIGHTING NEW WORK PLAN

E2.1

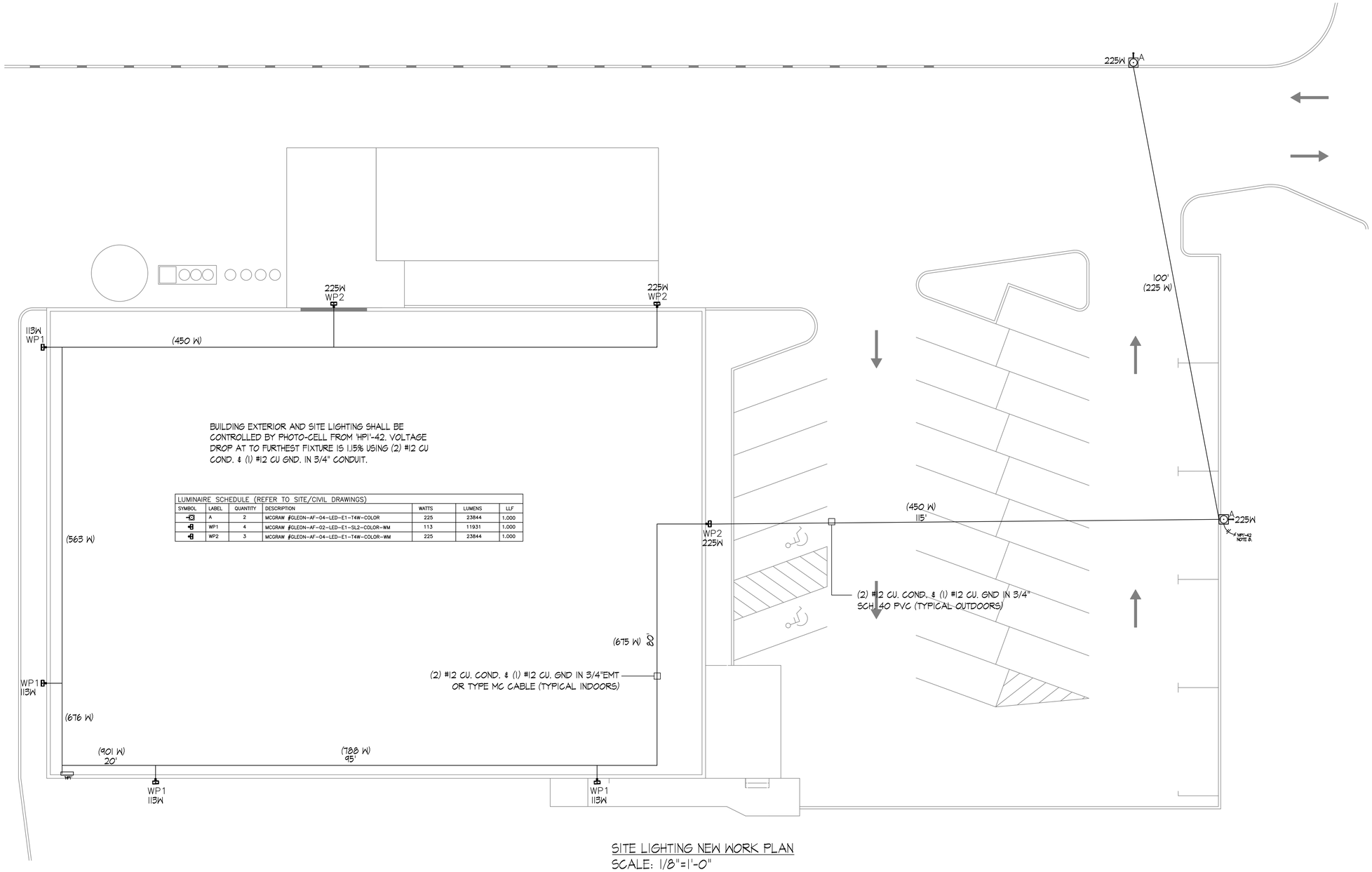

LUMINAIRE SCHEDULE (REFER TO SITE/CIVIL DRAWINGS)						
SYMBOL	LABEL	QUANTITY	DESCRIPTION	WATTS	LUMENS	LLF
	A	2	MCGRAW #GLEON-AF-04-LED-E1-T4W-COLOR	225	23844	1.000
	WP1	4	MCGRAW #GLEON-AF-02-LED-E1-SL2-COLOR-WM	113	11931	1.000
	WP2	3	MCGRAW #GLEON-AF-04-LED-E1-T4W-COLOR-WM	225	23844	1.000

SITE LIGHTING NEW WORK PLAN
SCALE: 1/8"=1'-0"

studio 1200, LLC
511 MILLBURN AVENUE
SHORT HILLS, NJ 07078
973.376.5111
973.376.5011
www.studio1200.com
CERITFICATE OF AUTHORIZATION # AC-710

Nancy Dougherty, AIA, LEED
NJ-AI 14861/NY-025099/CT-ARI.0011798

MEP CONSULTANT:
Oxbury Engineering Associates, L.L.C.
3 Gold Mine Road
Flanders, NJ 07836
Phone: (973) 252-6973
Fax: (973) 252-7028
COA: 24GA28096600
Rick Macieko, PE
NJ PE: 37111 USVI PE: 0-4263-1B
NY PE: 087618 MD PE: 50005
PA PE: 0777177 CT PE: 32573

REA PROJECT NO. 18-1451

NO	ISSUE	DATE
1	ISSUED FOR BID & PERMIT	10/24/18
2	NJSEA PERMIT REVIEW	12/4/18
3	REVISED PER NJSEA COMMENTS	01/02/19
4	REVISED PER DUST COLLECTION RECEP. & MILL AREA EXHAUST	01/24/19
5	REVISED PER NJSEA COMMENTS	02/07/19
6	CONTRACT CONFORMANCE SET	02/20/19

BOLERO SNORT BREWERY
316 20TH STREET
CARLSTADT, NJ

SITE LIGHTING NEW WORK PLAN

E2.2

NEW PANELBOARD | 480/277 VOLTS | NEMA TYPE: 1 | 400 AMP. MAINS
PANELBOARD - 'HP1' | SOLID NEUTRAL: | A.I.C. SYM.: 25,000 | 400A MB
LOCATION - UTILITY CLOSET | GROUND BUS: | MOUNTING: SURFACE | 54 POLES
3-PHASE, 4-WIRE | SQUARE D NF454M400CU

LOAD SERVED	GRD. WIRE	WIRE	TRIP	POLE	LOAD(KW)	POLE NO. (A B C)	POLE NO.	LOAD(KW)	POLE	TRIP	WIRE	GRD. WIRE	LOAD SERVED
PORTABLE PUMP CART	#12	#12	20	3	6.51	1	2						
						3	4	69.34	3	110	#2	#6	CHILLER
						5	6						
GRAIN SILO	#10	#8	50	3	24.91	7	8						
						9	10	18.40	3	40	#8	#10	PORTABLE CIP SKID
						11	12						
MILL	#12	#12	20	3	9.13	13	14						
						15	16	2.00	3	60	#6	#10	CONTROL PANEL
						17	18						
AUGER	#12	#12	20	3	2.66	19	20	9.36	1	20	#12	#12	BREWERY LIGHTING
						21	22	9.33	1	20	#12	#12	OFFICE LIGHTING
						23	24						
AIR COMPRESSOR	#12	#12	20	3	7.50	25	26	9.72	3	20	#12	#12	RTU-1
						27	28						
						29	30						
75 KVA TRANSFORMER	#8	#3	100	3	55.98	31	32	8.97	3	15	#12	#12	RTU-1A
						33	34						
						35	36						
						37	38	2.27	3	15	#12	#12	OAU-1
						39	40						
						41	42	1.58	1	20	#12	#12	EXTERIOR BUILDING & SITE LIGHTING
						43	44	3.83	1	20	#12	#12	BREWERY LIGHTING
						45	46	3.83	1	20	#12	#12	BREWERY LIGHTING
						47	48						
						49	50						
						51	52						
						53	54						
					106.49			126.53					

TOTAL CONNECTED LOAD: 233.02 KVA (280.61A)
INCLUDES NO DIVERSITY

NEW PANELBOARD | 208/120 VOLTS | NEMA TYPE: 1 | 225 AMP. MAINS
PANELBOARD - 'LP1A' (SECTION 1) | SOLID NEUTRAL: | A.I.C. SYM.: 22,000 | 200A MB
LOCATION - UTILITY CLOSET | GROUND BUS: | MOUNTING: SURFACE | 54 POLES
3-PHASE, 4-WIRE | SQUARE D NQOD442M225GFTL

LOAD SERVED	GRD. WIRE	WIRE	TRIP	POLE	LOAD(KW)	POLE NO. (A B C)	POLE NO.	LOAD(KW)	POLE	TRIP	WIRE	GRD. WIRE	LOAD SERVED
BOILER	#12	#12	20	1	1.00	1	2	.52	1	20	#12	#12	FEEDWATER TANK
CONDENSATE RETURN	#12	#12	20	1	.50	3	4	.50	1	50	#10	#10	CELLAR PANEL
DRYER	#10	#10	30	2	4.00	5	6	.90	1	20	#12	#12	OFFICE 203 RECEPTACLES
						7	8	1.44	1	20	#12	#12	OPEN OFFICE & CONFERENCE RM RECEPTS
RECEPTION RM RECEPTS	#12	#12	20	1	1.26	9	10	1.50	1	20	#12	#12	PANTRY RM COUNTERTOP RECEPT
PANTRY RM COUNTERTOP RECEPT	#12	#12	20	1	1.50	11	12	1.00	1	20	#12	#12	PANTRY REFRIGERATOR
PATIO RECEPTACLES	#12	#12	20	1	1.00	13	14	1.00	1	20	#12	#12	BREWER'S OFFICE REFRIGERATOR
TASTING ROOM RECEPTACLES	#12	#12	20	1	1.44	15	16						
1ST FLOOR OFFICE RECEPTACLES	#12	#12	20	1	.72	17	18	5.00	3	20	#12	#12	FORKLIFT CHARGING STATION
1ST FLOOR BATHROOM GFI'S	#12	#12	20	1	1.26	19	20						
BREWHOUSE GENERAL RECEPTACLES	#12	#12	20	1	.90	21	22	1.00	1	20	#12	#12	MOTORIZED ROLLING DOOR
EUH-1	#12	#12	20	2	3.00	23	24	1.44	1	20	#12	#12	OFFICE 201 & 202 RECEPTACLES
						25	26	.90	1	20	#12	#12	BREWHOUSE RECEPTACLES
EUH-2	#10	#10	30	2	5.00	27	28						
						29	30	2.00	2	20	#12	#12	LARGE WALK-IN REF. CONDENSER
TASTING ROOM RECEPTACLES	#12	#12	20	1	1.26	31	32						
DISHWASHER	#12	#12	20	1	1.20	33	34	1.00	2	20	#12	#12	LARGE WALK-IN REF. EVAPORATOR
WASHER	#12	#12	20	1	1.00	35	36	1.00	1	20	#12	#12	WALK-IN REF. CONDENSER
EF-1	#12	#12	20	1	.20	37	38	.50	1	20	#12	#12	WALK-IN REF. EVAPORATOR
RECEPTION RM RECEPTS	#12	#12	20	1	1.08	39	40	1.38	1	20	#12	#12	GAS FIRED UNIT HEATERS
EXTERIOR SIGNS	#12	#12	20	1	1.00	41	42	.50	1	20	#12	#12	FIRE ALARM CONTROL PANEL
					34.44			27.83					

TOTAL CONNECTED LOAD(INCLUDES LP2): 62.32 KVA (173.14A)
INCLUDES NO DIVERSITY

NEW PANELBOARD | 208/120 VOLTS | NEMA TYPE: 1 | 225 AMP. MAINS
PANELBOARD - 'LP1A' (SECTION 2) | SOLID NEUTRAL: | A.I.C. SYM.: 22,000 | 200A MB
LOCATION - UTILITY CLOSET | GROUND BUS: | MOUNTING: SURFACE | 54 POLES
3-PHASE, 4-WIRE | SQUARE D NQOD442M225GU

LOAD SERVED	GRD. WIRE	WIRE	TRIP	POLE	LOAD(KW)	POLE NO. (A B C)	POLE NO.	LOAD(KW)	POLE	TRIP	WIRE	GRD. WIRE	LOAD SERVED
WATER HEATER & WATER HEATER PUMP	#12	#12	20	1	.80	43	44	.50	1	20	#12	#12	ROOFTOP SERVICE EQUIPMENT
OUTSIDE RECEPTACLE	#12	#12	20	1	1.20	45	46	.18	1	20	#12	#12	BOILER ROOM RECEPTACLE
OUTSIDE RECEPTACLE	#12	#12	20	1	1.20	47	48	.54	1	20	#12	#12	OFFICE LIGHTING
OUTSIDE RECEPTACLE	#12	#12	20	1	1.20	49	50	1.50	1	20	#12	#12	BREWER'S OFFICE COUNTER GFI'S
EF-2 & THH-1	#12	#12	20	1	.85	51	52	1.50	1	20	#12	#12	BREWER'S OFFICE COUNTER GFI'S
DUST COLLECTION SYSTEM	#12	#12	20	1	1.92	53	54	.72	1	20	#12	#12	BREWER'S OFFICE GENERAL RECEPTACLES
						55	56						
						57	58	1.46	2	20	#12	#12	ACCU-1 & HP-1
						59	60						
						61	62						
						63	64						
						65	66						
						67	68						
						69	70						
						71	72						
						73	74						
						75	76						
						77	78						
						79	80						
						81	82						
						83	84						

6

ELECTRICAL RISER NOTES:

1. PROVIDE LOCKABLE UTILITY APPROVED DISCONNECT SWITCH FOR GOLD METER SEQUENCING. NON-FUSED DISCONNECT IS PERMITTED WITH MINIMUM AIC RATING OF 25,000 A. IF 25,000 A NON-FUSED DISCONNECT IS NOT AVAILABLE, PROVIDE FUSIBLE DISCONNECT WITH 400A CLASS J FUSES MINIMUM 25K AIC RATING, CONFIRM THIS IS ACCEPTABLE WITH PSE&G.

CONDUCTOR SCHEDULE:

'a': (3) #3 CU COND. & (1) #8 GND. IN 1-1/4"C
'b': (4) #3/0 CU COND. & (1) #4 GND. IN 2"C

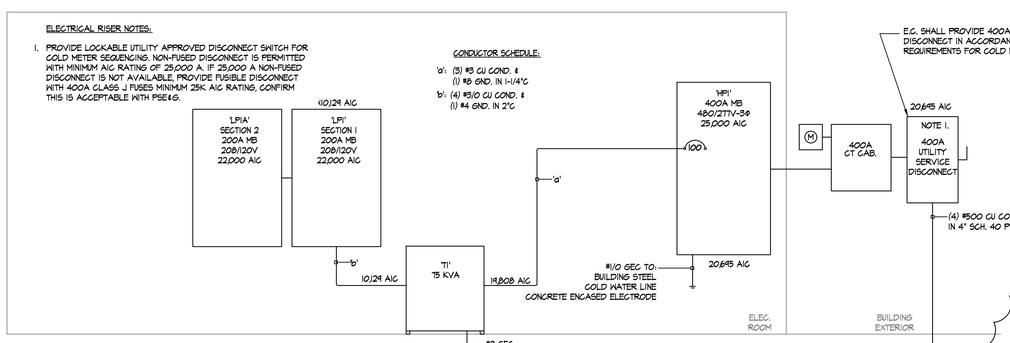

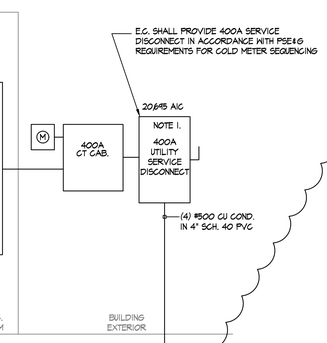

ELECTRICAL RISER DIAGRAM
SCALE: NTS

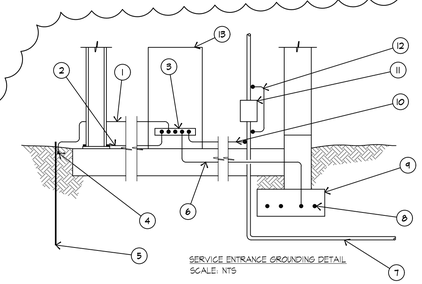

SERVICE ENTRANCE GROUNDING DETAIL
SCALE: NTS

1. GROUND ROD GROUNDING ELECTRODE CONDUCTOR.
2. STEEL GROUNDING ELECTRODE CONDUCTOR.
3. NEUTRAL BUS.
4. BOLTED CONNECTION.
5. 10'-0" X 5/8" COPPER CLAD GROUND ROD.
6. REINFORCING STEEL GROUNDING ELECTRODE CONDUCTOR BARE.
7. METALLIC WATER MAIN 10'-0" MINIMUM LENGTH.
8. 1/2"Ø MINIMUM REBAR 20'-0" MINIMUM LENGTH.
9. THERMITE WELD WITH ASPHALTUM COATING.
10. WATER SERVICE GROUNDING ELECTRODE CONDUCTORS.
11. WATER METER.
12. BONDING JUMPER BOLTED CONNECTIONS.
13. SERVICE ENTRANCE EQUIPMENT.

NOTES:
SEE ONE LINE DIAGRAM FOR REQUIRED GROUNDS AND GROUNDING ELECTRODE SIZES. GROUNDING ELECTRODE CONDUCTORS SHALL BE UNSPLICED INSULATED COPPER UNLESS OTHERWISE NOTED.

studio 1200, LLC
511 MILLBURN AVENUE
SHORT HILLS, NJ 07078
973.376.5111
973.376.5011
www.studio1200.com
CERITFICATE OF AUTHORIZATION # AC-710

Nancy Dougherty, AIA, LEED
NJ-AI 14861/NY-025099/CT-ARI.0011798

MEP CONSULTANT:
Roxbury Engineering Associates, L.L.C.
3 Gold Mine Road
Flanders, NJ 07836
Phone: (973) 252-6973
Fax: (973) 252-7028
COA: 24GA28096600
Rick Macieko, PE
NJ PE: 37111 USVI PE: 0-4263-1B
NY PE: 087618 MD PE: 50005
PA PE: 077177 CT PE: 32573

REA PROJECT NO. 18-1451

NO	ISSUE	DATE
1	ISSUED FOR BID & PERMIT	10/24/18
2	NJSEA PERMIT REVIEW	12/4/18
3	REVISED PER NJSEA COMMENTS	01/02/19
4	REVISED PER DUST COLLECTION RECEP. & MILL AREA EXHAUST	01/24/19
5	REVISED PER NJSEA COMMENTS	02/07/19
6	CONTRACT CONFORMANCE SET	02/20/19

BOLERO SNORT BREWERY
316 20TH STREET
CARLSTADT, NJ

ELECTRICAL PANEL SCHEDULES & RISER DIAGRAM

E3.0

01. CONTRACT DOCUMENTS

a. The drawings and specifications have been prepared in sufficient detail to enable one proficient in the art of Electrical Construction to enter into an equitable Contract and carry out the work in the true spirit of the designers intentions in accordance with the best practice for this class of work. No attempt has been made to detail items of materials or labor that are self-evident as necessary to effect a complete and perfect operating installation. Contractor shall furnish any and all items that may be required for the proper functioning of all systems.

b. Locations of equipment, outlets, etc., shown on drawings are approximately correct but are subject to such modification as may be found necessary or desirable at time of installation in order to meet any structural conditions and avoid interference with other work or equipment provided by the Owner. Make such changes as are required without extra cost.

02. SCOPE OF WORK

a. Furnish all labor, materials, equipment, and permits necessary for proper completion of all new work as required by this Specification and the applicable drawings.

b. In general the work consists of the following:

1. Electrical panel, feeders, and branch circuiting.
2. Switches, receptacle, raceways and boxes.
3. Wiring methods and devices.
4. Lighting fixtures and lamps.
5. Work in connection with other trades.
6. Temporary power and light.
7. Exit lighting.
8. Automatic temperature control wiring.
9. Obtaining and paying for all permits in connection with Electrical work.
10. Shop drawings, and record drawings.
11. Tests and inspections.
12. Guarantees.

03. RELATED WORK OF OTHER SECTIONS

a. The following work will be executed under other Sections of this Specification, or by others.

1. Building-in of all sleeves, flashing collars, access panels, inserts, etc., however, Electrical Contractor shall be responsible for furnishing proper settings and locations.
2. All finish painting, except for shop coats.
3. Cabinets, counter tops, shelving, etc.
4. Telephone work shall be done by owners telephone company.

04. PERMITS, RULES, AND REGULATIONS

a. Contractor shall obtain and pay for all licenses, permits, and inspection fees in connection with the work of this Contract.

b. Contractor shall furnish required certificate of approval of installation upon completion of work.

c. Comply with all codes or regulations which may apply, and install all electrical work in accordance with the latest edition of the "National Electrical Code", and any local authority having jurisdiction.

05. MATERIALS AND WORKMANSHIP

a. All materials shall be new and conform to the standards as specified.

b. All labor shall be performed by mechanics skilled in their trade and under experienced supervision. All work shall be properly executed and present a neat and workmanlike appearance, meeting the approval of the Architect.

06. PROTECTION OF WORK AND MATERIAL

a. Take all precautions and be responsible for proper care and protection of all portions of all materials delivered and work performed, until the completion and acceptance of the work as a whole and issuance of certificates for final payment of such Contract.

b. Cap all empty conduits, after installation they shall be left unobstructed and with a drag wire for pulling conductors or cables in future.

c. Any and all portions of the work liable to damage by reason of any operation conducted under this Contract, by weather or by others engaged on the work, must be securely protected by temporary but substantial boarding or covering which must be maintained in position until not required, and its removal is approved by Architect.

07. SHOP DRAWINGS

a. In accordance with General Conditions submit all necessary shop or installation drawings or diagrams as may be required to make work performance clear.

b. Submit for approval shop drawings of the following items:

1. Panelboard, circuit breakers, and wireway.
2. Switches, receptacles, plates.
3. Lighting fixtures, lamps.

c. Contractor shall stamp all shop drawings with a statement that he has examined them for conformance with Specifications and plans. Failure to do so will result in the return of shop drawings without approval.

08. WORK IN CONNECTION WITH OTHER TRADES

a. General: The Electrical Contractor shall include all wiring associated with mechanical equipment as generally shown on the drawings but specifically as shown in shop drawings and further described herein. Examine the Architectural and mechanical plans and specifications to familiarize yourself with the extend of this work.

b. Mounting Equipment by Others: The General Contractor and Mechanical Contractor shall furnish all controls, starters, thermostats, etc., and turn them over to the Electrical Contractor, complete with wiring diagrams and installation details, for him to wire and install.

c. Electrical Contractor shall wire all items requiring electric connections except ATC wiring.

d. Wiring Diagrams: Request wiring diagrams from other Contractors in sufficient time to install properly sized and located conduits, outlets, etc. Install conductors required and connect in accord with approved shop drawings. Connect each and every piece of equipment, motors, starters, control devices, components, etc., complete and ready for satisfactory operation.

e. It shall be the responsibility of the Electrical Contractor to furnish and install wire, raceways, fittings, etc., to connect and make all equipment ready for operation. This Contractor shall cooperate with other trades installing other services to the equipment, in order to coordinate the installation and make the equipment functional.

09. CODES

a. All work shall be systematically, carefully, and neatly performed and shall conform to the latest standards and interpretation of the National Electric Code and all other governing codes which may be applicable.

10. SPECIAL ELECTRICAL CONDITIONS

1. Codes, Ordinances, Rules:

a. Special Conditions applying to the general execution of the Electrical Work are:

A. Comply with all State Bureaus and Authorities having jurisdiction and with the latest edition of the 2014 National Electrical Code. Indication of such compliance shall be evidenced by paying for and furnishing the Owner with certificates issued by the applicable Fire Underwriters, indicating that all rough and finished work has been inspected and approved by such Agency.

B. Comply with all utility and local code provisions, paying any and all fees.

2. Testing: The Electrical Contractor shall perform all tests of the equipment installed under this Contract to prove the accompanying drawings have been adhered to and that all systems are functioning properly. Notify the Architect and Engineer when systems are ready for testing.

3. Wiring Diagrams by Others:

A. Request any and all wiring diagrams required which are to be furnished by others well in advance of the time they would be required as to avoid delays in the job.

B. Use only approved drawings where approvals are called for.

C. Notify the Architect if wiring diagrams are not received in due time; errors are contained

4. Certificates: Underwriters inspections and approvals shall be arranged and paid for by the Electrical Contractor. Submit certificates prior to final inspection.

11. WIRING AND METHODS

a. All conductors shall be copper with THHN/THWN or XHHW insulation. No conductor smaller than #12 shall be used except for thermostat or other control wiring.

b. Solid and Stranded Wire: All conductor sizes shall be American wire gauge sizes with No. 8 and larger of stranded construction and No. 10 and smaller solid.

c. Colors: Every feeder shall have a distinguishing color taped or painted on at terminal ends for each phase and for grounded neutrals, in accordance with the recommendations of the National Electric Code, latest edition. Multiple conductor cables shall have insulation of varied distinguishing colors, or patterns for each conductor.

d. Manufacturers: All conductors shall be 600 volt and of insulated type copper and shall be as manufactured by General Cable Corp., Circle Wire Corp., Phelps Dodge.

e. Grounding: Grounding conductors and ground connections shall be as provided by the National Electric Code or specifically indicated on the plans for all grounded distribution systems, conduits, panels, motor, switchboards and all metallic uses of apparatus or appliances enclosing "Live" electrical wiring or parts. Use grounding type locknuts on all feeder conduits entering and leaving all lighting and power distribution panels, bus ducts, cable tap boxes, motor control center, switchboard wireways, etc.

f. Branch Circuit Wiring: Wire to any circuit, outlets, devices, switches, etc., indicated to be connected thereto, but note that actual circuit enumeration need not be identical to that listed so long as the grouping of items on a circuit corresponds in every case to that which is required. Take branch circuits from panels in such manner that the load will be balanced on all three phases equally. Note that switch legs require same grade and type wiring as for branch circuits from panels.

12. ELECTRICAL PANEL

a. General: Panelboard shall be UL labeled and rated for the voltage supplied, complete with circuit breakers scheduled and capable of interrupting the fault current that can be supplied at the point of installation, (including motor feed-back).

b. Style:

1. 277/480 and/or 120/208 volt type: Surface mounted, 3 phase, 4 wire NYE distribution.
2. Panelboard shall be as manufactured by Square D or equal by G.E., Gavin-Graham, or ITE.

c. Circuit Breaker Types: Ambient temperature compensated thermal magnetic over-center trip single handle (no bales allowed) on breakers in frame and trip sizes schedule. The circuit breakers shall be quick make - quick break on manual as well as automatic operation and shall have inverse time characteristics secured through the use of Bi-metallic tripping element supplemented by a magnetic trip and shall be of the indicating type, providing on-off "tripped" positions of the operating handle. When the breaker is tripped automatically, the handle shall assume a middle position between "on" and "off". All multi-pole breakers shall be so designed that on overload on one pole automatically causes all poles to open.

d. Circuit Breaker Arrangement: Single pole breakers in phase sequenced order so that any 3 adjacent breaker poles will connect A, B, and C phases sequentially; main bus and phase to which connected clearly identified, full removability of any unit without disturbing adjacent units, loosening or affecting supplemental insulation supplied to obtain clearances, or other code requirements.

e. Circuit Breaker Sizes and Quantities: See the various electrical panel schedules and panel equipment schedules etc., on drawings; equip with sufficient quantities of circuit breakers, as scheduled. Coordinate all circuit breakers in entire electrical systems for code approved RMS, amperes, trip sizes, etc. The main circuit breaker shall be a shunt trip type, of the rating indicated on the plans.

f. Internal Mounting and Bussing: Back pan flanged for entire length of angle iron securely fastened to same for rigidity; screws, bolts, and lock washers only for copper connections; bus bars securely fastened to bases independent of breakers for support main and branch circuit connections of copper cross-section based upon NEMA standards; main busses and back pan arranged so that branch circuits may be changed without additional machining, drilling, or tapping.

g. Box Enclosure: Cabinet shall be of sufficient size to provide a minimum gutter space of four inches on all sides or as indicated on the drawings. Box shall be made from code gauge galvanized steel and shall be equipped with an in and out adjustment feature on back pan mounted studs. Front shall be flush or surface as indicated on the drawings, of code gauge sheet bonderized and finished one coat gray lacquer and shall include door and directory frame with combination lock and catch with two milled keys. All locks shall be furnished with vault handle operator and with three point catch. Front shall be furnished with approved adjustable indicating trim clamps as the means for securing the front to the box.

h. Panel Interior: The panelboard interior shall be factory assembled complete with circuit breakers as shown in the schedule on the drawings. Interior shall be so designed and assembled that any individual breaker can be replaced without disturbing adjacent units or without removing main bus or branch circuit connectors. Entire interior assembly shall consist of a reinforced "Z" shaped back pan on which box assembly and breakers are mounted. Panelboard shall be so designed that the branch circuit, connections to the main bus provide sequence (full distributed) phasing. All main buses shall be copper and shall be securely fastened to insulating base and shall not depend on the branch circuit breakers for support. Pressure wire connectors shall be used throughout. Lug stops shall be furnished to prevent lugs from turning and decreasing electrical clearances between live parts and all electrical connections shall be of 98% conductivity copper to copper (no current carried by screws alone) 100 ampere per square inch density, with all parts machined and finished.

13. SLEEVES AND CAULKING

a. Special attention is hereby drawn to Building construction regarding materials. Any conduits which pass through the slab or exterior walls shall be properly sleeved and made watertight to the satisfaction of the Architect.

14. LOCATIONS OF OUTLETS

a. Drawings accompanying these specifications are intended to show only general arrangement and extent of all work to be done. Determine exact location and arrangement of all work as work progresses.

b. Locations of equipment, outlets, etc., shown on drawings are approximately correct but are subject to such modification as may be found necessary or desirable at time of installation in order to meet any structural conditions and avoid interference with other work or to suit layout of equipment provided by other trades or the Owner. Verify all locations with Architect prior to installation of rough work and make such changes as are required without extra cost.

c. Gang Boxes: Where two outlets such as convenience, switch, etc., occur together, use a two-gang partitioned box with a common combination face or device plate.

d. Special Cutouts: Consult Architectural Drawings in conjunction with the Electrical Drawings. Where outlets are shown in wood facings or walls this Contractor shall cut out the necessary apertures of his outlet boxes. Before installing outlet boxes for switches, the Electrical Contractor shall check the swing of all doors and locate the outlet boxes on the strike side of the doors.

e. Equipment Outlets: Where an outlet is indicated as serving a specific piece of equipment, locate outlet as required by equipment or layout roughing drawings. Work from approved equipment and roughing shop drawings.

f. Terminal and Equipment Cabinets: Panelboard, terminal and equipment cabinets shall be installed with the top 6'0" above the finished floor or as required in accordance with the National Electric Code.

g. Mounting Heights: Unless noted or directed otherwise, wall outlets shall be centered above finished floor as follows:

1. Convenience and utility outlets 18" or as noted
2. Lighting switches 48"
3. Other switches as noted
4. Thermostats 48" or as noted.

15. RACEWAYS

a. Conduit runs shall be parallel with or at right angles to walls and ceilings. Conduits shall be supported on approved types of wall brackets, ceiling trapeze, strap hangers, or pipe straps. Conduit shall be secured by means of toggle bolts on hollow masonry units, expansion anchors in concrete or machine screws on metal surfaces. Nails are not permitted. Support horizontal runs of conduit no more than 7 feet apart.

b. All interior conduit shall be electric metallic tubing (3/4" min.) unless otherwise noted on the plans. Exterior conduit shall be rigid galvanized steel or PVC, as permitted by NEC.

c. Conduit uses: Conduit shall be installed in locations as follows.

1. Directly buried in earth, rigid steel conduit or PVC, schedule 40.
2. Under concrete slabs, rigid steel or PVC schedule 40 (with code size ground wire).
3. Hung ceilings and masonry walls-rigid steel, intermediate steel, E.M.T.

d. Provide 1/8" nylon dragline in all empty conduit.

16. WIRING DEVICES AND PLATES

a. Provide at every indicated outlet, the proper device and wall plate as hereinafter specified and as indicated on the plans.

b. Wall switches shall be 20 amp AC quiet type, toggle action as noted on plans.

c. Receptacles for general use shall be 125 volt, 2 pole, 3 wire type as noted on plans.

d. Through wiring of receptacles is not permitted. All receptacles shall be connected to the branch circuit conductors by means of "pigtails" and splices.

e. Plates: Finish shall be as directed by Architect.

17. WIRING METHODS

a. General: All conduit shall be concealed in wall construction, hung ceilings, etc., where possible.

b. Raceways: Generally, but not exclusively, use the following as manufactured by National Electric, Triangle, General Cable, in 3/4" minimum size.

1. Rigid hot dipped galvanized - in concrete, wet areas, and mechanical equipment areas.
2. Thinwall (EMT) - in dropped ceiling areas, interior block walls.
3. Greenfield (neoprene coated) - to all motors and vibrating equipment, minimum length 3'0" and looped 360 degrees. Use "Sealtite" or weather proof flexible raceway where exposed to weather or wet conditions.
4. Fire alarm wiring to be plenum rated or in metal conduit.

c. Supports, Hangers, Fittings: Support all raceways and boxes from building structure only, and not the work of other trades, such as piping, T-bar, ceilings. Supports and hangers shall be galvanized as manufactured by Fee & Mason or equivalent.

d. Pull Boxes: Sheet steel boxes shall be formed of hot dipped galvanized sheet steel, code gauge dimensions. Pull boxes shall be installed where necessary to facilitate the pulling or splicing of feeders.

18. SPLICING

a. Splicing of wires up to 3 No. 8 gauge conductors shall be made with pressure connectors, wire nuts or screw caps. Splices above this size will be made with approved mechanical connectors and insulated with plastic tape. Splices in damp locations shall be made with approved splice kits, as manufactured by Minnesota Mining and Manufacturing Company.

19. MOTOR WIRING

a. Flexible Conduit: All motor outlets shall consist of a minimum of a eighteen inch (18") length of flexible Greenfield conduit to each motor. Where motors are fed from conduits above motors, a box shall be set at approved height and Greenfield run from box to motor. Use liquid-tight flexible metallic conduit where required for motors exposed to the weather or in damp locations.

20. WIRING DEVICES

Basis of Design:

a. General: Furnish and install quality devices bearing UL label for the service and electrical rating where used of size specified, all similar and equal to Hubbell, Arrow Hart, Bryant, or approved substitutes, inclusive of the following: Where more than one device is indicated in the location, they shall be ganged together in one box and under one plate as required.

b. Electric Panels: Square 'D', Cutler Hammer, General Electric or Siemens.

c. Electrical Receptacles: Hubbell #5362 or equivalent.

d. Single Pole Switches: Hubbell #1221 or equivalent.

21. DISCONNECT SWITCHES

a. It is the intent of the Mechanical Plans to require all disconnect switches to be provided with the HVAC equipment; however, the electrical contractor shall coordinate with the mechanical trade to ensure that all code required disconnect devices will be installed. Disconnect switches shall be general duty type, as manufactured by Siemens, Square D, I.T.E., or approved equal.

b. Disconnect switches shall be weatherproof type when used in exterior locations.

22. BALANCING LOADS EQUALLY ON PHASES

a. The Contractor, in making this installation, shall balance all loads as evenly as possible on all phases at each panel. If necessary, he shall reconnect branch circuits as required to provide equal phase balance. As-built drawings and panel schedules shall reflect circuiting as actually connected to each panel.

23. LIGHTING FIXTURES AND LAMPS

a. General: Provide and install fixture units as scheduled on drawings complete with lamps as specified or otherwise required, including all necessary hanging hardware, blocking supports, etc. for a safe, non-hazardous installation.

b. Fixture Hanging: Fixture boxes, etc. shall be supported to suit the type of ceiling installed. Provide galvanized channel bars and clamps, etc., required. Clamps and cross members shall be as manufactured by Unistrut or approved equal. No fixture shall be supported from conduit which is unsupported for a space of greater than 5 feet. Lay in fixtures shall be supported independent of ceiling supports.

c. Lamps: As specified on drawings.

d. Fixture Locations: All fixture locations shown are to be considered diagrammatic and subject to final location by the Architect. Generally, not exclusively, all fixture units and outlets shall be centered in tiles both ways, centered on beams where so shown, etc. Note the construction in the areas where units are to be installed and verify mounting requirements, such as plaster frames, tile flanges, supporting bars, etc.

e. Fluorescent Ballasts (Electronic):

1. Ballasts for fluorescent fixtures shall be suitable for the electrical characteristics of the supply circuits to which they are to be connected and shall be suitable for operating the quantity of specified lamps.
2. U.L. listed, Class P, sound rating "A", 0.95 minimum power factor, 20KHZ minimum operating frequency, less than 20% total harmonic distortion, 3 year warranty including replacement labor allowance. Manufacturers: MagneTek-Triad Octic or Advance VEL-RH.

24. TELEPHONE WORK

a. All telephone work required and installation of telephone wiring shall be arranged for by Owner and done by Owner's telephone equipment company including phones, etc.

25. AUTOMATIC TEMPERATURE CONTROL WIRING

a. Unless otherwise noted all control wiring shall be by Automatic Temperature Control Contractor.

b. All power required for same shall be by Electric Contractor.

26. TEMPORARY LIGHT AND POWER

a. Furnish and install a temporary light and power system for use by all trades.

b. Power shall be taken from a temporary electrical service.

c. One 100 watt lamp and socket shall be installed for each 200 square feet of floor space (3 per circuit) or individual space, whichever is smaller.

d. One receptacle shall be installed for each three hundred square feet of floor space (3 per circuit) and one 208 volt, 1 phase power outlet per 3000 square feet.

e. Temporary light and power shall be installed in conformance with the National Electric Code. All power outlets shall have ground fault protection.

f. Temporary light and power shall be maintained during the normal working hours of all trades. Trades requiring additional power or power at time other than normal working hours shall make separate arrangements with the Electrical Contractor and pay for same.

g. Contractor shall arrange with utility for temporary power and shall pay all associated construction costs for installation. Cost of energy will be by Owner.

h. System shall be removed completely at the end of the project, or when directed by Architect.

27. CLEANING AND REMOVAL OF RUBBISH

a. The Contractor shall at all times keep the premises free of all waste or surplus materials, rubbish, and debris, which is caused by his employees or results from his work.

b. After all equipment and fixtures have been installed, the Electrical Contractor shall remove all labels, stickers, rust stains, temporary covers, etc. All foreign materials shall be blown out or flushed out of all switches, fixtures, panels, fans, motors, devices, raceways, etc. Identification plates on all equipment shall be free of excess paint or grease and shall be left clean so as to be easily readable.

c. The Contractor shall leave his portion of the work in a safe and clean condition ready for operation. In cases of dispute, the Owner shall remove all rubbish or excess materials or do all cleaning and charge the cost to the Contractor.

28. JOB COMPLETION

a. General: Completion of the Electrical Work shall be diligently pressed with a work force adequate to meet all schedules and in completeness by the Electrical Contractor or before offering for final inspection.

b. Sealing: Seal electrical conduits, outlet boxes, or runs through any plenum or vacuum chamber (in furred or housed spaces used as a duct for conveying air in ventilating systems). Thoroughly seal all such piping, boxes, etc., permanently so as to prevent the passage of air through or around same, and to assure the airtightness of the chamber involved. Any electrical lines passing through plenum barriers are to be run through sleeves of proper size.

c. Cleaning: Thoroughly clean both exterior and interior of all panels, lighting fixtures, and other equipment furnished and installed under this Contract. Remove any paint or plaster that may have fallen on any item. If surfaces have become rusted or otherwise badly marred, repaint to match where necessary. Remove all surplus electrical equipment and debris.

d. Electrical Motor and Starter Checking: Check all motor starters after setting (regardless of who has furnished the starter) for correct heater size or other protective device for the motor protected and correct any discrepancies.

e. Identification: Install accurate typed directories of circuits in frame under plastic in all panels; check every separately mounted motor starter for proper operation, and identify same with approved means such as card holders with typed designations; check all electrical facilities, including pullboxes, and properly identify in readable and approved manner suitable for the place where positioned. Label wiring of systems operating at less than 50 volts at all boxes to identify same fully. Multiple conductor control, etc., wiring shall be identified by number using E-Z markers and provide a directory showing numbers and connections thereto. Note also that labeling of exposed conduit is required and described in other sections.

f. Plant Operation: Provide the services of the foreman in charge of the installation of the electrical work on this project, or other equally qualified Union Journeyman for one (1) working day or as may be otherwise required, to be devoted to instructions to Owner's representative in all details of operating servicing, and maintaining all electrical items.

g. Inspection: Note that various inspections may be made by the Engineer and that the Electrical Contractor shall provide a responsible person, authorized to make binding decisions during the course of inspection. The Electrical Contractor shall open any box, cabinet or enclosures as the Architect and/or Engineer may direct for purposes of inspection. Identify any and all conductors, main and branch feeders, etc., as requested by the Engineer.

h. Final Inspection: Notify the Architect and Engineer that the building and/or parts thereof are ready for final inspection. Prior to notification, the Electrical Contractor shall make his inspection, notify the Architect and Engineer, (in writing) of the work remaining to be done and when completion of items is expected. Completion of punch list items listed by the Architect and/or Engineer shall be immediately corrected and both notified (in writing) when complete.

29. RECORD DRAWINGS

a. During construction, Contractor shall keep an accurate record of all deviations between work as shown on the drawings and that which is actually installed. The cost of furnishing prints and preparing record drawings showing all deviations shall be borne by this Contractor and shall be included in his bid.

b. Preparation of record drawings shall be carried on as the work progresses and be available for inspection by Architect. When all revisions showing work as finally installed are made, prints shall be submitted for review to Architect and upon approval, two sets shall be delivered to Architect before final payment for completed work will be made.

30. MAINTENANCE INSTRUCTIONS

a. This Contractor shall provide instructions on the operation of all systems in all details, to representative of the Owner, who will be operating and maintaining systems. Notify Architect in advance, when all arrangements have been made for time when instructions are to be given, so that Architect or his representative may be present.

31. GUARANTEE

a. Furnish guarantee for all labor and materials for one (1) year from date of final acceptance of Contract or full occupancy of building by Owner, whichever is earlier. Include agreement to repair and make good at own expense any and all defects in work or material appearing during that time, which in Architect's opinion arise from defective workmanship, imperfect, or inferior materials.

b. The manufacturers of all equipment to be supplied under this Contract by the Electrical Contractor shall warrant the same against all costs, including labor and material, arising out of defects in material and/or workmanship, for a period coextensive with the guarantee period provided in the Contract Documents, however, the Contractor shall bear the responsibility for manufacturers compliance.

studio 1200, LLC
511 MILLBURN AVENUE
SHORT HILLS, NJ 07078
973.376.5111
973.376.5011
www.studio1200.com
CERITFICATE OF AUTHORIZATION # AC-710

Nancy Dougherty, AIA, LEED
NJ-AI 14861/NY-025099/CT-ARI.0011798

MEP CONSULTANT:
Oxbury Engineering Associates, L.L.C.
3 Gold Mine Road
Flanders, NJ 07836
Phone: (973) 252-6973
Fax: (973) 252-7028
COA: 24GA28096600
Rick Macieko, PE
NJ PE: 37111 USVI PE: 0-4263-1B
NY PE: 087618 MD PE: 50005
PA PE: 0777177 CT PE: 32573

REA PROJECT NO. 18-1451

STATE OF NEW JERSEY RICHARD MACIEKO No. GE37111 PROFESSIONAL ENGINEER

NO	ISSUE	DATE
1	ISSUED FOR BID & PERMIT	10/24/18
2	NJSEA PERMIT REVIEW	12/4/18
3	REVISED PER NJSEA COMMENTS	01/02/19
4	REVISED PER DUST COLLECTION RECEP. & MILL AREA EXHAUST	01/24/19
5	REVISED PER NJSEA COMMENTS	02/07/19
6	CONTRACT CONFORMANCE SET	02/20/19

BOLERO SNORT BREWERY
316 20TH STREET
CARLSTADT, NJ

ELECTRICAL SPECIFICATIONS

E4.0

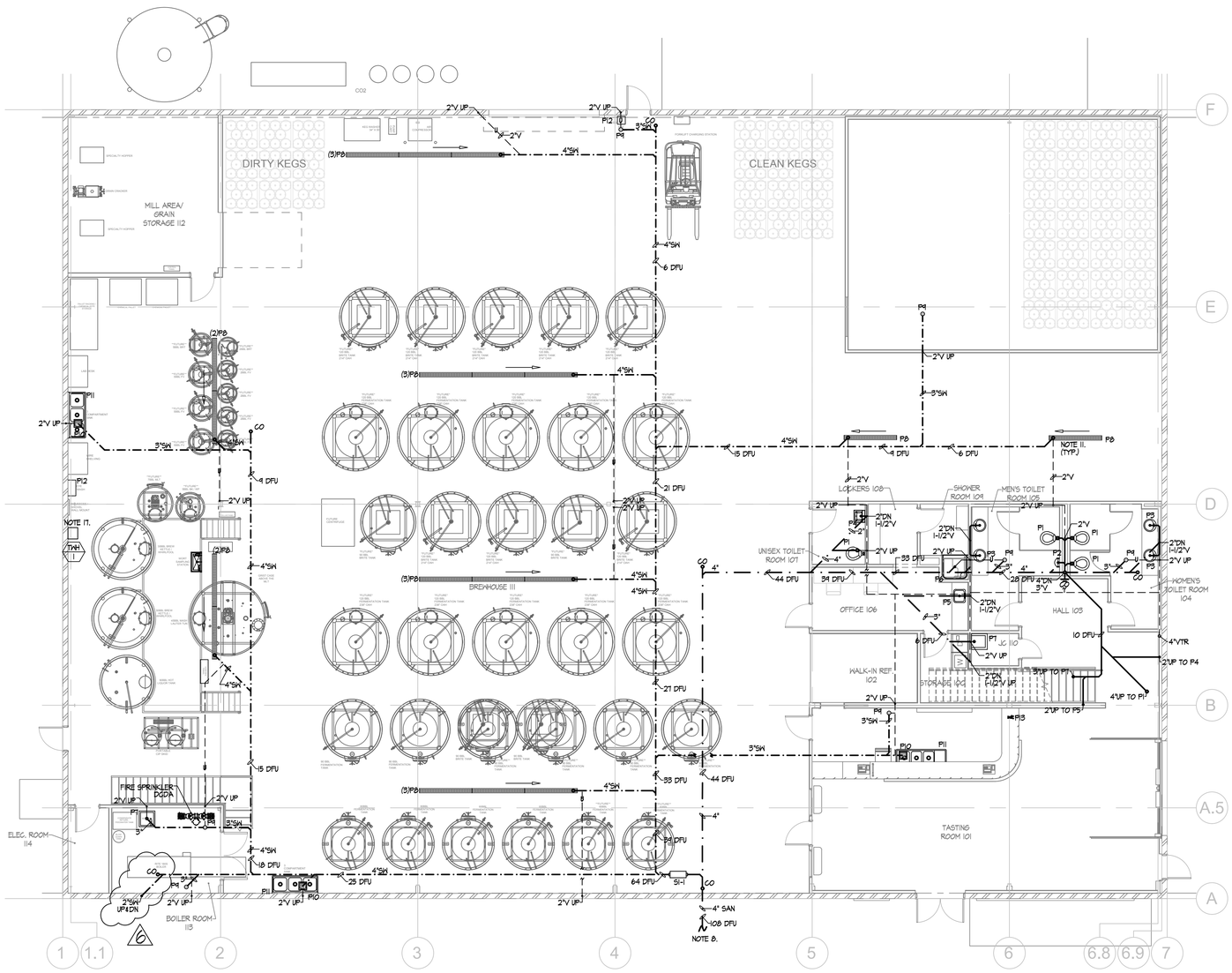

MAIN LEVEL SANITARY & VENT NEW WORK PLAN

SCALE: 1/8"=1'-0"

SI 1	SOLIDS INTERCEPTOR
ZURN MODEL Z1183-800, 4" INLET & OUTLET, 50 GPM FLOW RATE, 1.35 CU. FT. SOLIDS CAPACITY. PROVIDE REMOVABLE LATCHED LID AND REMOVABLE SEDIMENT BASKET. INSTALL IN PIT REFER TO CIVIL/STRUCTURAL DRAWINGS FOR DETAILS. THE INTERCEPTOR HAS BEEN SIZED BASED ON A CONNECTED LOAD OF 65 DFU'S (32.5 GPM FLOW RATE).	

PLUMBING NOTES:

1. ALL WORK TO BE INSTALLED IN ACCORDANCE WITH 2015 NATIONAL STANDARD PLUMBING CODE.
2. REFER TO RISER DIAGRAM FOR BRANCH PIPING SIZES.
3. ALL DWV PIPING ABOVE THE CEILING MAY BE SCHEDULE 40 PVC AS THERE IS A DUCTED RETURN HVAC SYSTEM.
4. PROVIDE WATER HAMMER SHOCK ARRESTERS ON ALL SUPPLY LINES WITH QUICK CLOSING VALVES.
5. ALL TIE-IN POINTS ARE ILLUSTRATIVE, P.C. SHALL VERIFY IN FIELD.
6. ALL FLOOR DRAINS SHALL BE PROVIDED WITH ASSE 1072 PROVENT TRAP GUARD TO MAINTAIN SEAL FROM SEWER GASES PERMITTED UNDER 5.3.6 OF 2015 NSPC.
7. PROVIDE WATTS MODEL ¼" LFMMV SERIES LEAD-FREE MIXING VALVE (SET AT 110°F) ON HOT WATER SUPPLY LINE TO HAND SINK FAUCET. MIXING VALVE IS LISTED UNDER ASSE STANDARDS 1016, 1017 AND 1070.
8. REFER TO SITE/CIVIL DRAWINGS FOR CONTINUATION OF SANITARY LINE CONNECTION POINT TO SEWER LINE OR MANHOLE.
9. REFER TO SITE/CIVIL DRAWINGS FOR CONTINUATION OF WATER LINE CONNECTION POINTS.
10. REFER TO SITE/CIVIL DRAWINGS FOR CONTINUATION OF NATURAL GAS LINE CONNECTION POINT.
11. CONTINUOUS FLOOR TRENCH DRAIN- BASIS OF DESIGN ZURN MODEL B86-5I HDPE TRENCH DRAIN SYSTEM, 6-1/4"W x 80"L WITH HEEL PROOF POLYETHYLENE GRATE (TRENCH SYSTEM TO BE APPROVED BY OWNER)
12. 3"Ø VENT AND COMBUSTION AIR UP TO ROOF, TERMINATE WITH MANUFACTURER CONCENTRIC VENT KIT.
13. PROVIDE 1" CW LINE WITH FULL PORT BALL VALVE. COORDINATE FINAL WATER TERMINATION REQUIREMENTS WITH OWNER. IT IS ANTICIPATED THAT VESSEL FILLING IS INDIRECT. IF THE EQUIPMENT REQUIRE A HARD CONNECTION, PLUMBING CONTRACTOR SHALL PROVIDE THE REQUIRED BACKFLOW WITH ATMOSPHERIC VENT REQUIRED UNDER THE 2015 NSPC.
14. GAS PIPING HAS BEEN SIZED BASED ON TABLE 402.4(2) OF THE 2015 IFGC, LESS THAN 2 PSI INLET PRESSURE, PD=0.5" W.C., TOTAL DEVELOPED LENGTH = 175' FOR BUILDING LOADS. BUILDING LOAD IS 2,284 MBH, 4" PIPE HAS A CAPACITY OF 4,410 MBH.
15. PROVIDE SECONDARY STAINLESS STEEL DRAIN PAN BELOW WATER HEATER AND PIPE TO MOP RECEPTOR, TERMINATING WITH INDIRECT CONNECTION, REFER TO DETAIL SHEET.
16. P.C. SHALL PROVIDE HOSE BIB WITH VACUUM BREAKER.
17. P.C. SHALL PIPE CONDENSATE FROM TANKLESS WATER HEATER TO FLOOR SINK. COORDINATE ROUTE WITH OWNER.

SYMBOL KEY	
	SANITARY LINE (ABOVE FLOOR)
	SANITARY LINE (BELOW FLOOR)
SW	SOLIDS WASTE LINE (BELOW FLOOR)
C	CONDENSATE LINE
V U	VENT LINE U DENOTES BELOW FLOOR
	COLD WATER SUPPLY LINE
	HOT WATER SUPPLY LINE
KHW	KITCHEN HOT WATER SUPPLY LINE (140°F)
	HOT WATER RETURN LINE
G	NATURAL GAS PIPING
VTR	VENT THRU ROOF
C.O. (W)	CLEAN OUT (W) DENOTES WALL
	TIE-IN POINT
	ISOLATION VALVE
	CHECK VALVE
	DENOTES 'STOP' VALVE AT FIXTURE
HB FF	HOSE BIB W/VACUUM BREAKER (FF DENOTES FROST FREE)
	FLOOR DRAIN
	FLOOR SINK

FIXTURE LEGEND	
P1	WALL MOUNT TOILET
P1F	FLOOR MOUNT TOILET
P2	URINAL
P3	COUNTER LAVATORY
P4	WALL HUNG LAVATORY
P5	COUNTER SINK
P6	SHOWER
P7	MOP RECEPTOR
P8	FLOOR TROUGH
P9	FLOOR DRAIN
P10	FLOOR SINK
P11	3-COMPARTMENT SINK
P12	EMERGENCY EYEWASH
P13	WATER DISPENSER
P14	KITCHEN SINK
DW	DISHWASHER

studio 1200, LLC
511 MILLBURN AVENUE
SHORT HILLS, NJ 07078
973.376.5111
973.376.5011
www.studio1200.com
CERITFICATE OF AUTHORIZATION # AC-710

Nancy Dougherty, AIA, LEED
NJ-AI 14861/NY-025099/CT-ARI.0011798

MEP CONSULTANT:
Roxbury Engineering Associates, L.L.C.
3 Gold Mine Road
Flanders, NJ 07836
Phone: (973) 252-6973
Fax: (973) 252-7028
COA: 24GA28096600
Rick Macieko, PE
NJ PE: 37111 USVI PE: 0-4263-1B
NY PE: 087618 MD PE: 50005
PA PE: 0777177 CT PE: 32573

REA PROJECT NO. 18-1451

NO	ISSUE	DATE
1	ISSUED FOR BID & PERMIT	10/24/18
2	NJSEA PERMIT REVIEW	12/4/18
3	REVISED PER NJSEA COMMENTS	01/02/19
4	REVISED PER DUST COLLECTION RECEP. & MILL AREA EXHAUST	01/24/19
5	REVISED PER NJSEA COMMENTS	02/07/19
6	CONTRACT CONFORMANCE SET	02/20/19

BOLERO SNORT BREWERY
316 20TH STREET
CARLSTADT, NJ

MAIN LEVEL SANITARY & VENT NEW WORK PLAN

P1.0

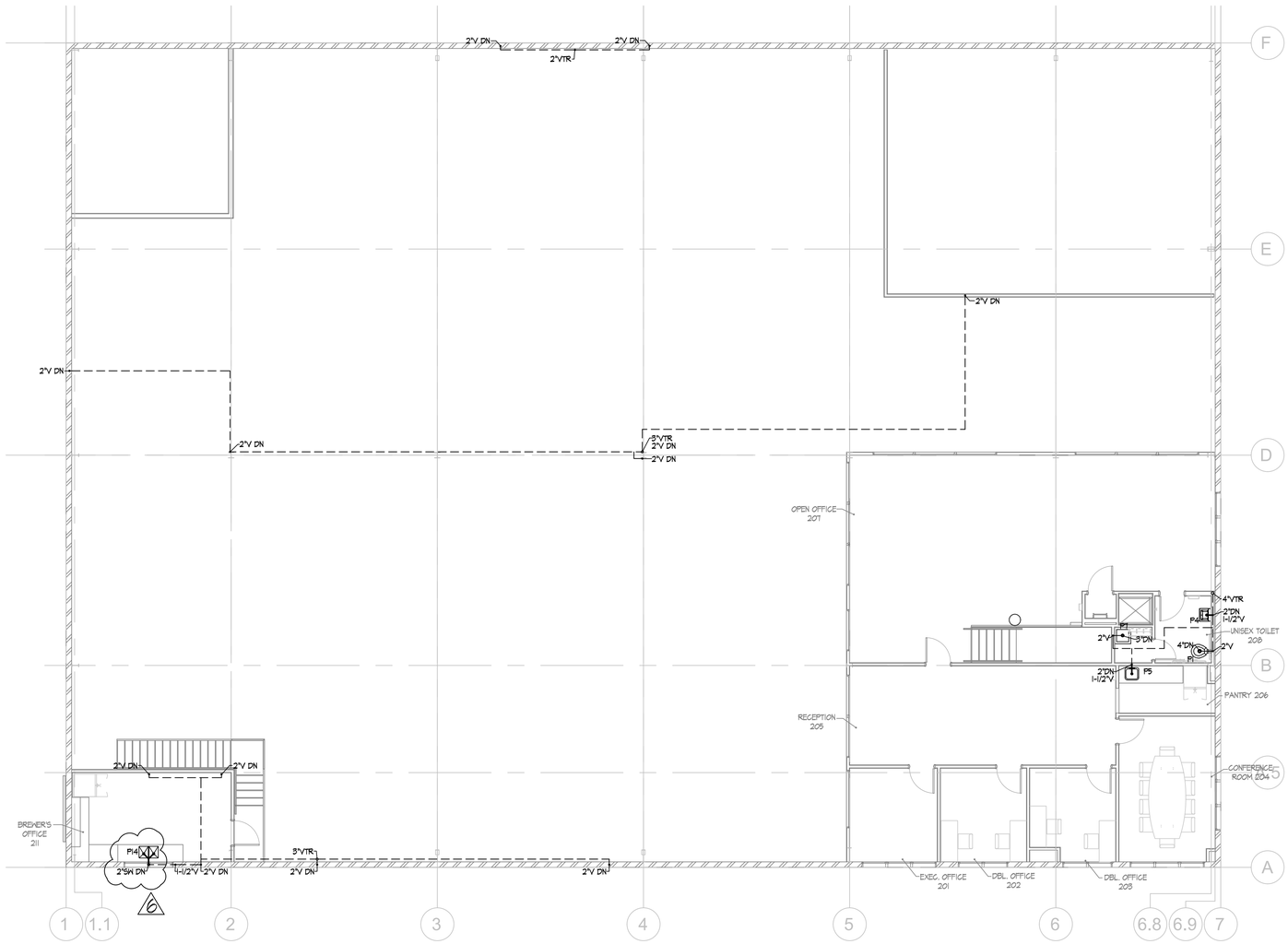

UPPER LEVEL SANITARY & VENT NEW WORK PLAN
SCALE: 1/8"=1'-0"

PLUMBING NOTES:

1. ALL WORK TO BE INSTALLED IN ACCORDANCE WITH 2015 NATIONAL STANDARD PLUMBING CODE.
2. REFER TO RISER DIAGRAM FOR BRANCH PIPING SIZES.
3. ALL DWV PIPING ABOVE THE CEILING MAY BE SCHEDULE 40 PVC AS THERE IS A DUCTED RETURN HVAC SYSTEM.
4. PROVIDE WATER HAMMER SHOCK ARRESTERS ON ALL SUPPLY LINES WITH QUICK CLOSING VALVES.
5. ALL TIE-IN POINTS ARE ILLUSTRATIVE. P.C. SHALL VERIFY IN FIELD.
6. ALL FLOOR DRAINS SHALL BE PROVIDED WITH ASSE 1072 PROVENT TRAP GUARD TO MAINTAIN SEAL FROM SEWER GASES PERMITTED UNDER 5.3.6 OF 2015 NSPC.
7. PROVIDE WATTS MODEL $\frac{1}{4}$" LFMMV SERIES LEAD-FREE MIXING VALVE (SET AT 110°F) ON HOT WATER SUPPLY LINE TO HAND SINK FAUCET. MIXING VALVE IS LISTED UNDER ASSE STANDARDS 1016, 1017 AND 1070.
8. REFER TO SITE/CIVIL DRAWINGS FOR CONTINUATION OF SANITARY LINE CONNECTION POINT TO SEWER LINE OR MANHOLE.
9. REFER TO SITE/CIVIL DRAWINGS FOR CONTINUATION OF WATER LINE CONNECTION POINTS.
10. REFER TO SITE/CIVIL DRAWINGS FOR CONTINUATION OF NATURAL GAS LINE CONNECTION POINT.
11. CONTINUOUS FLOOR TRENCH DRAIN- BASIS OF DESIGN ZURN MODEL 886-SI HDPE TRENCH DRAIN SYSTEM, 6-1/4"W x 80"L WITH HEEL PROOF POLYETHYLENE GRATE (TRENCH SYSTEM TO BE APPROVED BY OWNER)
12. 3"Ø VENT AND COMBUSTION AIR UP TO ROOF, TERMINATE WITH MANUFACTURER CONCENTRIC VENT KIT.
13. PROVIDE 1" CW LINE WITH FULL PORT BALL VALVE. COORDINATE FINAL WATER TERMINATION REQUIREMENTS WITH OWNER. IT IS ANTICIPATED THAT VESSEL FILLING IS INDIRECT. IF THE EQUIPMENT REQUIRE A HARD CONNECTION, PLUMBING CONTRACTOR SHALL PROVIDE THE REQUIRED BACKFLOW WITH ATMOSPHERIC VENT REQUIRED UNDER THE 2015 NSPC.
14. GAS PIPING HAS BEEN SIZED BASED ON TABLE 402.4(2) OF THE 2015 IFGC, LESS THAN 2 PSI INLET PRESSURE, PD=0.5" W.C., TOTAL DEVELOPED LENGTH = 175' FOR BUILDING LOADS. BUILDING LOAD IS 2,844 MBH, 4" PIPE HAS A CAPACITY OF 4,910 MBH.
15. PROVIDE SECONDARY STAINLESS STEEL DRAIN PAN BELOW WATER HEATER AND PIPE TO MOP RECEPTOR, TERMINATING WITH INDIRECT CONNECTION, REFER TO DETAIL SHEET.
16. P.C. SHALL PROVIDE HOSE BIB WITH VACUUM BREAKER.
17. P.C. SHALL PIPE CONDENSATE FROM TANKLESS WATER HEATER TO FLOOR SINK. COORDINATE ROUTE WITH OWNER.

SYMBOL KEY	
	SANITARY LINE (ABOVE FLOOR)
	SANITARY LINE (BELOW FLOOR)
SN	SOLIDE WASTE LINE (BELOW FLOOR)
	CONDENSATE LINE
U	VENT LINE U DENOTES BELOW FLOOR
	COLD WATER SUPPLY LINE
	HOT WATER SUPPLY LINE
KHW	KITCHEN HOT WATER SUPPLY LINE (140°F)
	HOT WATER RETURN LINE
G	NATURAL GAS PIPING
VTR	VENT THRU ROOF
C.O. (N)	CLEAN OUT (N) DENOTES WALL
	TIE-IN POINT
	ISOLATION VALVE
	CHECK VALVE
	DENOTES 'STOP' VALVE AT FIXTURE
HB FF	HOSE BIB W/VACUMN BREAKER (FF DENOTES FROST FREE)
	FLOOR DRAIN
	FLOOR SINK

FIXTURE LEGEND	
P1	WALL MOUNT TOILET
P1F	FLOOR MOUNT TOILET
P2	URINAL
P3	COUNTER LAVATORY
P4	WALL HUNG LAVATORY
P5	COUNTER SINK
P6	SHOWER
P7	MOP RECEPTOR
P8	FLOOR TROUGH
P9	FLOOR DRAIN
P10	FLOOR SINK
P11	3-COMPARTMENT SINK
P12	EMERGENCY EYEWASH
P13	WATER DISPENSER
P14	KITCHEN SINK
DW	DISHWASHER

studio 1200, LLC
511 MILLBURN AVENUE
SHORT HILLS, NJ 07078
973.376.5111
973.376.5011
www.studio1200.com
CERITFICATE OF AUTHORIZATION # AC-710

Nancy Dougherty, AIA, LEED
NJ-AI 14861/NY-025099/CT-ARI.0011798

MEP CONSULTANT:
Oxbury Engineering Associates, L.L.C.
3 Gold Mine Road
Flanders, NJ 07836
Phone: (973) 252-6973
Fax: (973) 252-7028
COA: 24GA28096600
Rick Macieko, PE
NJ PE: 37111 USVI PE: 0-4263-1B
NY PE: 087618 MD PE: 50005
PA PE: 0777177 CT PE: 32573
REA PROJECT NO. 18-1451

NO	ISSUE	DATE
1	ISSUED FOR BID & PERMIT	10/24/18
2	NJSEA PERMIT REVIEW	12/4/18
3	REVISED PER NJSEA COMMENTS	01/02/19
4	REVISED PER DUST COLLECTION RECEP. & MILL AREA EXHAUST	01/24/19
5	REVISED PER NJSEA COMMENTS	02/07/19
6	CONTRACT CONFORMANCE SET	02/20/19

BOLERO SNORT BREWERY
316 20TH STREET
CARLSTADT, NJ

UPPER LEVEL SANITARY & VENT NEW WORK PLAN

P1.1

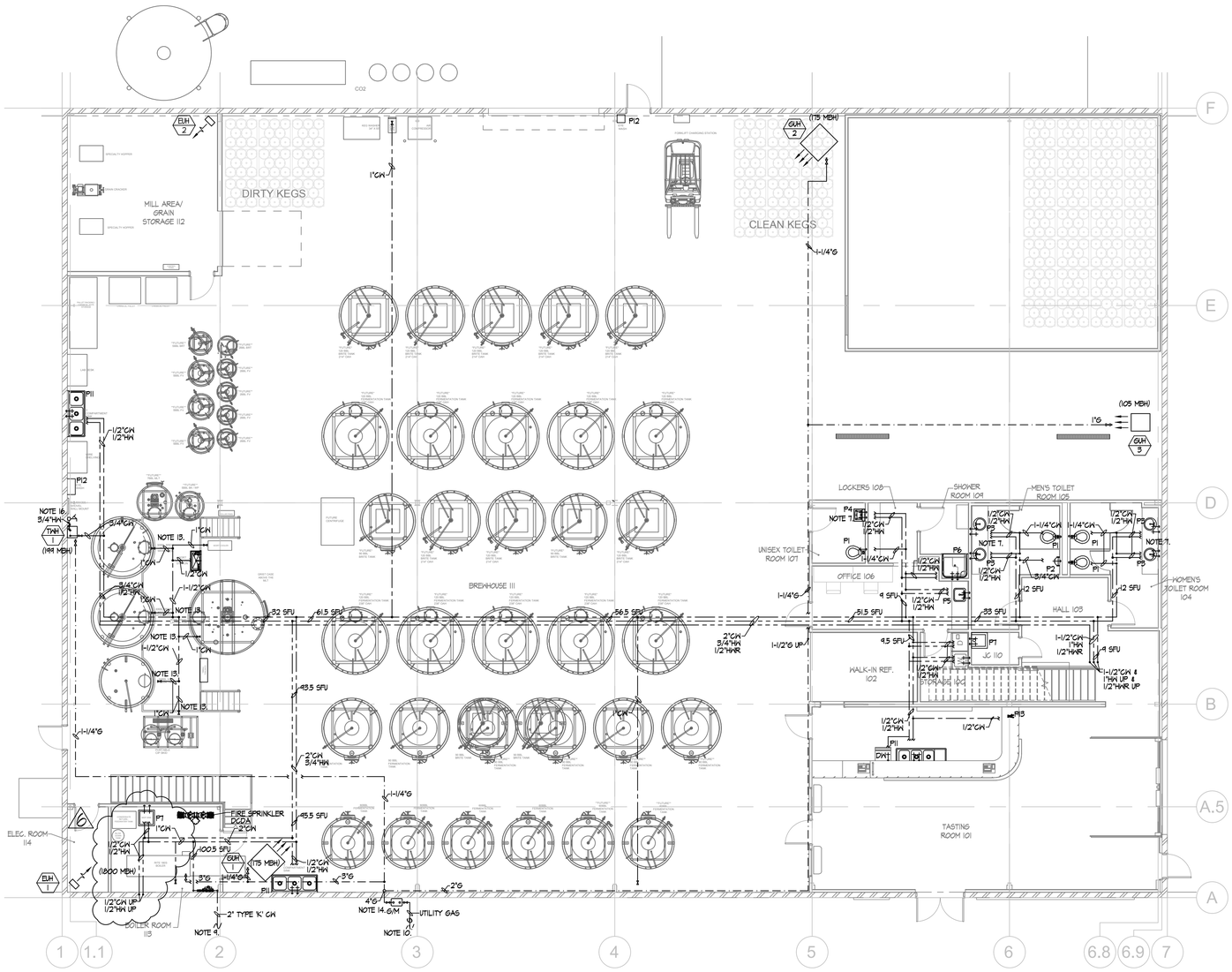

MAIN LEVEL DOMESTIC WATER & GAS NEW WORK PLAN
SCALE: 1/8"=1'-0"

PLUMBING NOTES:

1. ALL WORK TO BE INSTALLED IN ACCORDANCE WITH 2015 NATIONAL STANDARD PLUMBING CODE.
2. REFER TO RISER DIAGRAM FOR BRANCH PIPING SIZES.
3. ALL DWV PIPING ABOVE THE CEILING MAY BE SCHEDULE 40 PVC AS THERE IS A DUCTED RETURN HVAC SYSTEM.
4. PROVIDE WATER HAMMER SHOCK ARRESTERS ON ALL SUPPLY LINES WITH QUICK CLOSING VALVES.
5. ALL TIE-IN POINTS ARE ILLUSTRATIVE, P.C. SHALL VERIFY IN FIELD.
6. ALL FLOOR DRAINS SHALL BE PROVIDED WITH ASSE 1072 PROVENT TRAP GUARD TO MAINTAIN SEAL FROM SEWER GASES PERMITTED UNDER 5.3.6 OF 2015 NSPC.
7. PROVIDE WATTS MODEL ¼" LFMMV SERIES LEAD-FREE MIXING VALVE (SET AT 110°F) ON HOT WATER SUPPLY LINE TO HAND SINK FAUCET. MIXING VALVE IS LISTED UNDER ASSE STANDARDS 1016, 1017 AND 1070.
8. REFER TO SITE/CIVIL DRAWINGS FOR CONTINUATION OF SANITARY LINE CONNECTION POINT TO SEWER LINE OR MANHOLE.
9. REFER TO SITE/CIVIL DRAWINGS FOR CONTINUATION OF WATER LINE CONNECTION POINTS.
10. REFER TO SITE/CIVIL DRAWINGS FOR CONTINUATION OF NATURAL GAS LINE CONNECTION POINT.
11. CONTINUOUS FLOOR TRENCH DRAIN- BASIS OF DESIGN ZURN MODEL 886-SI HDPE TRENCH DRAIN SYSTEM, 6-1/4"W x 80"L WITH HEEL PROOF POLYETHYLENE GRATE (TRENCH SYSTEM TO BE APPROVED BY OWNER)
12. 3"Ø VENT AND COMBUSTION AIR UP TO ROOF, TERMINATE WITH MANUFACTURER CONCENTRIC VENT KIT.
13. PROVIDE 1" CW LINE WITH FULL PORT BALL VALVE. COORDINATE FINAL WATER TERMINATION REQUIREMENTS WITH OWNER. IT IS ANTICIPATED THAT VESSEL FILLING IS INDIRECT. IF THE EQUIPMENT REQUIRE A HARD CONNECTION, PLUMBING CONTRACTOR SHALL PROVIDE THE REQUIRED BACKFLOW WITH ATMOSPHERIC VENT REQUIRED UNDER THE 2015 NSPC.
14. GAS PIPING HAS BEEN SIZED BASED ON TABLE 402.4(2) OF THE 2015 IFGC, LESS THAN 2 PSI INLET PRESSURE, PD=0.5" W.C., TOTAL DEVELOPED LENGTH = 175' FOR BUILDING LOADS. BUILDING LOAD IS 2,844 MBH, 4" PIPE HAS A CAPACITY OF 4,810 MBH.
15. PROVIDE SECONDARY STAINLESS STEEL DRAIN PAN BELOW WATER HEATER AND PIPE TO MOP RECEPTOR, TERMINATING WITH INDIRECT CONNECTION, REFER TO DETAIL SHEET.
16. P.C. SHALL PROVIDE HOSE BIB WITH VACUUM BREAKER.
17. P.C. SHALL PIPE CONDENSATE FROM TANKLESS WATER HEATER TO FLOOR SINK. COORDINATE ROUTE WITH OWNER.

SYMBOL KEY	
	SANITARY LINE (ABOVE FLOOR)
	SANITARY LINE (BELOW FLOOR)
SN	SOLIDE WASTE LINE (BELOW FLOOR)
	CONDENSATE LINE
	VENT LINE U DENOTES BELOW FLOOR
	COLD WATER SUPPLY LINE
	HOT WATER SUPPLY LINE
KHW	KITCHEN HOT WATER SUPPLY LINE (140°F)
	HOT WATER RETURN LINE
G	NATURAL GAS PIPING
VTR	VENT THRU ROOF
C.O. (N)	CLEAN OUT (N) DENOTES WALL
	TIE-IN POINT
	ISOLATION VALVE
	CHECK VALVE
	DENOTES 'STOP' VALVE AT FIXTURE
HB FF	HOSE BIB W/VACUUM BREAKER (FF DENOTES FROST FREE)
	FLOOR DRAIN
	FLOOR SINK

FIXTURE LEGEND	
P1	WALL MOUNT TOILET
P1F	FLOOR MOUNT TOILET
P2	URINAL
P3	COUNTER LAVATORY
P4	WALL HUNG LAVATORY
P5	COUNTER SINK
P6	SHOWER
P7	MOP RECEPTOR
P8	FLOOR TROUGH
P9	FLOOR DRAIN
P10	FLOOR SINK
P11	3-COMPARTMENT SINK
P12	EMERGENCY EYEWASH
P13	WATER DISPENSER
P14	KITCHEN SINK
DW	DISHWASHER

studio 1200, LLC
511 MILLBURN AVENUE
SHORT HILLS, NJ 07078
973.376.5111
973.376.5011
www.studio1200.com
CERITFICATE OF AUTHORIZATION # AC-710

Nancy Dougherty, AIA, LEED
NJ-AI 14861/NY-025099/CT-ARI.0011798

MEP CONSULTANT:
Oxbury Engineering Associates, L.L.C.
3 Gold Mine Road
Flanders, NJ 07836
Phone: (973) 252-6973
Fax: (973) 252-7028
COA: 24GA28096600
Rick Macieko, PE
NJ PE: 37111 USVI PE: 0-4263-1B
NY PE: 087618 MD PE: 50005
PA PE: 0777177 CT PE: 32573

REA PROJECT NO. 18-1451

NO	ISSUE	DATE
1	ISSUED FOR BID & PERMIT	10/24/18
2	NJSEA PERMIT REVIEW	12/4/18
3	REVISED PER NJSEA COMMENTS	01/02/19
4	REVISED PER DUST COLLECTION RECEP. & MILL AREA EXHAUST	01/24/19
5	REVISED PER NJSEA COMMENTS	02/07/19
6	CONTRACT CONFORMANCE SET	02/20/19

BOLERO SNORT BREWERY
316 20TH STREET
CARLSTADT, NJ

MAIN LEVEL DOMESTIC WATER & GAS NEW WORK PLAN

P2.0

UPPER LEVEL DOMESTIC WATER & GAS NEW WORK PLAN
SCALE: 1/8"=1'-0"

PLUMBING NOTES:

1. ALL WORK TO BE INSTALLED IN ACCORDANCE WITH 2015 NATIONAL STANDARD PLUMBING CODE.
2. REFER TO RISER DIAGRAM FOR BRANCH PIPING SIZES.
3. ALL DWV PIPING ABOVE THE CEILING MAY BE SCHEDULE 40 PVC AS THERE IS A DUCTED RETURN HVAC SYSTEM.
4. PROVIDE WATER HAMMER SHOCK ARRESTERS ON ALL SUPPLY LINES WITH QUICK CLOSING VALVES.
5. ALL TIE-IN POINTS ARE ILLUSTRATIVE, P.C. SHALL VERIFY IN FIELD.
6. ALL FLOOR DRAINS SHALL BE PROVIDED WITH ASSE 1072 PROVENT TRAP GUARD TO MAINTAIN SEAL FROM SEWER GASES PERMITTED UNDER 5.3.6 OF 2015 NSPC.
7. PROVIDE MATTS MODEL ¾" LFMMV SERIES LEAD-FREE MIXING VALVE (SET AT 110°F) ON HOT WATER SUPPLY LINE TO HAND SINK FAUCET. MIXING VALVE IS LISTED UNDER ASSE STANDARDS 1016, 1017 AND 1070.
8. REFER TO SITE/CIVIL DRAWINGS FOR CONTINUATION OF SANITARY LINE CONNECTION POINT TO SEWER LINE OR MANHOLE.
9. REFER TO SITE/CIVIL DRAWINGS FOR CONTINUATION OF WATER LINE CONNECTION POINTS.
10. REFER TO SITE/CIVIL DRAWINGS FOR CONTINUATION OF NATURAL GAS LINE CONNECTION POINT.
11. CONTINUOUS FLOOR TRENCH DRAIN- BASIS OF DESIGN ZURN MODEL 886-SI HDPE TRENCH DRAIN SYSTEM, 6-1/4"W x 80"L WITH HEEL PROOF POLYETHYLENE GRATE (TRENCH SYSTEM TO BE APPROVED BY OWNER)
12. 3"Ø VENT AND COMBUSTION AIR UP TO ROOF, TERMINATE WITH MANUFACTURER CONCENTRIC VENT KIT.
13. PROVIDE 1" CW LINE WITH FULL PORT BALL VALVE. COORDINATE FINAL WATER TERMINATION REQUIREMENTS WITH OWNER. IT IS ANTICIPATED THAT VESSEL FILLING IS INDIRECT. IF THE EQUIPMENT REQUIRE A HARD CONNECTION, PLUMBING CONTRACTOR SHALL PROVIDE THE REQUIRED BACKFLOW WITH ATMOSPHERIC VENT REQUIRED UNDER THE 2015 NSPC.
14. GAS PIPING HAS BEEN SIZED BASED ON TABLE 402.4(2) OF THE 2015 IFGC, LESS THAN 2 PSI INLET PRESSURE, PD=0.5" W.C., TOTAL DEVELOPED LENGTH = 115' FOR BUILDING LOADS. BUILDING LOAD IS 2,844 MBH, 4" PIPE HAS A CAPACITY OF 4,410 MBH.
15. PROVIDE SECONDARY STAINLESS STEEL DRAIN PAN BELOW WATER HEATER AND PIPE TO MOP RECEPTOR, TERMINATING WITH INDIRECT CONNECTION, REFER TO DETAIL SHEET.
16. P.C. SHALL PROVIDE HOSE BIB WITH VACUUM BREAKER.
17. P.C. SHALL PIPE CONDENSATE FROM TANKLESS WATER HEATER TO FLOOR SINK. COORDINATE ROUTE WITH OWNER.

SYMBOL KEY	
	SANITARY LINE (ABOVE FLOOR)
	SANITARY LINE (BELOW FLOOR)
SW	SOLIDE WASTE LINE (BELOW FLOOR)
	CONDENSATE LINE
	VENT LINE U DENOTES BELOW FLOOR
	COLD WATER SUPPLY LINE
	HOT WATER SUPPLY LINE
KHW	KITCHEN HOT WATER SUPPLY LINE (140°F)
	HOT WATER RETURN LINE
G	NATURAL GAS PIPING
VTR	VENT THRU ROOF
C.O. (N)	CLEAN OUT (N) DENOTES WALL
	TIE-IN POINT
	ISOLATION VALVE
	CHECK VALVE
	DENOTES 'STOP' VALVE AT FIXTURE
HB FF	HOSE BIB W/VACUUM BREAKER (FF DENOTES FROST FREE)
	FLOOR DRAIN
	FLOOR SINK

FIXTURE LEGEND	
P1	WALL MOUNT TOILET
P1F	FLOOR MOUNT TOILET
P2	URINAL
P3	COUNTER LAVATORY
P4	WALL HUNG LAVATORY
P5	COUNTER SINK
P6	SHOWER
P7	MOP RECEPTOR
P8	FLOOR TROUGH
P9	FLOOR DRAIN
P10	FLOOR SINK
P11	3-COMPARTMENT SINK
P12	EMERGENCY EYEWASH
P13	WATER DISPENSER
P14	KITCHEN SINK
DW	DISHWASHER

studio 1200, LLC
511 MILLBURN AVENUE
SHORT HILLS, NJ 07078
973.376.5111
973.376.5011
www.studio1200.com
CERITFICATE OF AUTHORIZATION # AC-710

Nancy Dougherty, AIA, LEED
NJ-AI 14861/NY-025099/CT-ARI.0011798

MEP CONSULTANT:
Roxbury Engineering Associates, L.L.C.
3 Gold Mine Road
Flanders, NJ 07836
Phone: (973) 252-6973
Fax: (973) 252-7028
COA: 24GA28096600
Rick Macieko, PE
NJ PE: 37111 USVI PE: 0-4263-1B
NY PE: 087618 MD PE: 50005
PA PE: 0777177 CT PE: 32573

REA PROJECT NO. 18-1451

NO	ISSUE	DATE
1	ISSUED FOR BID & PERMIT	10/24/18
2	NJSEA PERMIT REVIEW	12/4/18
3	REVISED PER NJSEA COMMENTS	01/02/19
4	REVISED PER DUST COLLECTION RECEP. & MILL AREA EXHAUST	01/24/19
5	REVISED PER NJSEA COMMENTS	02/07/19
6	CONTRACT CONFORMANCE SET	02/20/19

BOLERO SNORT BREWERY
316 20TH STREET
CARLSTADT, NJ

UPPER LEVEL DOMESTIC WATER & GAS NEW WORK PLAN

P2.1

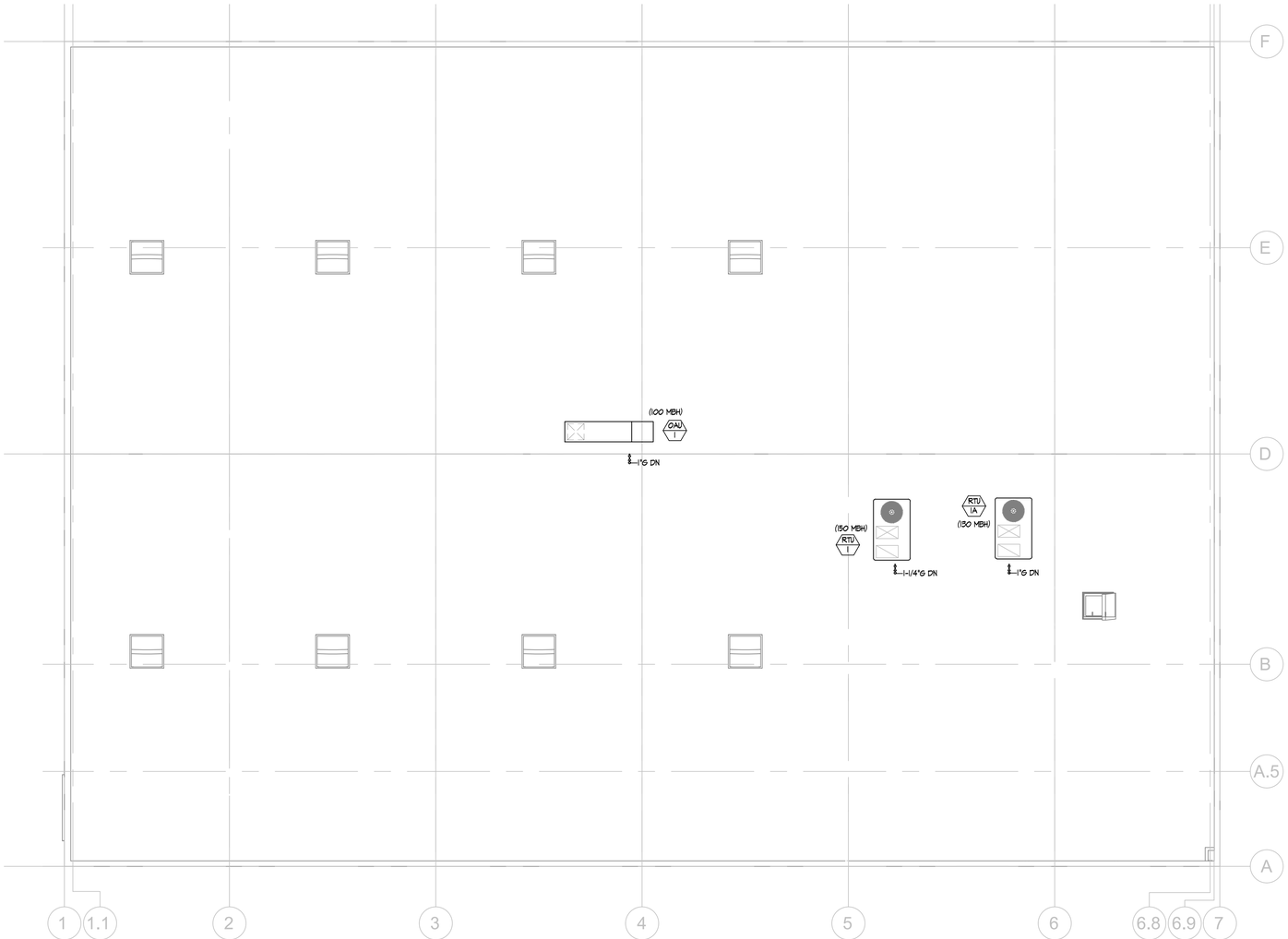

ROOF GAS NEW WORK PLAN
SCALE: 1/8"=1'-0"

PLUMBING NOTES:

1. ALL WORK TO BE INSTALLED IN ACCORDANCE WITH 2015 NATIONAL STANDARD PLUMBING CODE.
2. REFER TO RISER DIAGRAM FOR BRANCH PIPING SIZES.
3. ALL DWV PIPING ABOVE THE CEILING MAY BE SCHEDULE 40 PVC AS THERE IS A DUCTED RETURN HVAC SYSTEM.
4. PROVIDE WATER HAMMER SHOCK ARRESTERS ON ALL SUPPLY LINES WITH QUICK CLOSING VALVES.
5. ALL TIE-IN POINTS ARE ILLUSTRATIVE, P.C. SHALL VERIFY IN FIELD.
6. ALL FLOOR DRAINS SHALL BE PROVIDED WITH ASSE 1072 PROVENT TRAP GUARD TO MAINTAIN SEAL FROM SEWER GASES PERMITTED UNDER 3.3.6 OF 2015 NSPC.
7. PROVIDE WATTS MODEL 3/4" LFMMV SERIES LEAD-FREE MIXING VALVE (SET AT 110°F) ON HOT WATER SUPPLY LINE TO HAND SINK FAUCET. MIXING VALVE IS LISTED UNDER ASSE STANDARDS 1016, 1017 AND 1070.
8. REFER TO SITE/CIVIL DRAWINGS FOR CONTINUATION OF SANITARY LINE CONNECTION POINT TO SEWER LINE OR MANHOLE.
9. REFER TO SITE/CIVIL DRAWINGS FOR CONTINUATION OF WATER LINE CONNECTION POINTS.
10. REFER TO SITE/CIVIL DRAWINGS FOR CONTINUATION OF NATURAL GAS LINE CONNECTION POINT.
11. CONTINUOUS FLOOR TRENCH DRAIN- BASIS OF DESIGN ZURN MODEL Z86-SI HDPE TRENCH DRAIN SYSTEM, 6-1/4"W x 80"L WITH HEEL PROOF POLYETHYLENE GRATE (TRENCH SYSTEM TO BE APPROVED BY OWNER)
12. 3"Ø VENT AND COMBUSTION AIR UP TO ROOF, TERMINATE WITH MANUFACTURER CONCENTRIC VENT KIT.
13. PROVIDE 1" CW LINE WITH FULL PORT BALL VALVE. COORDINATE FINAL WATER TERMINATION REQUIREMENTS WITH OWNER. IT IS ANTICIPATED THAT VESSEL FILLING IS INDIRECT. IF THE EQUIPMENT REQUIRE A HARD CONNECTION, PLUMBING CONTRACTOR SHALL PROVIDE THE REQUIRED BACKFLOW WITH ATMOSPHERIC VENT REQUIRED UNDER THE 2015 NSPC.
14. GAS PIPING HAS BEEN SIZED BASED ON TABLE 402.4(2) OF THE 2015 IFGC, LESS THAN 2 PSI INLET PRESSURE, PD=0.5" W.C., TOTAL DEVELOPED LENGTH = 175' FOR BUILDING LOADS. BUILDING LOAD IS 2,844 MBH, 4" PIPE HAS A CAPACITY OF 4,810 MBH.
15. PROVIDE SECONDARY STAINLESS STEEL DRAIN PAN BELOW WATER HEATER AND PIPE TO MOP RECEPTOR, TERMINATING WITH INDIRECT CONNECTION, REFER TO DETAIL SHEET.
16. P.C. SHALL PROVIDE HOSE BIB WITH VACUUM BREAKER.
17. P.C. SHALL PIPE CONDENSATE FROM TANKLESS WATER HEATER TO FLOOR SINK. COORDINATE ROUTE WITH OWNER.

SYMBOL KEY	
	SANITARY LINE (ABOVE FLOOR)
	SANITARY LINE (BELOW FLOOR)
SW	SOLIDE WASTE LINE (BELOW FLOOR)
	CONDENSATE LINE
U	VENT LINE U DENOTES BELOW FLOOR
	COLD WATER SUPPLY LINE
	HOT WATER SUPPLY LINE
KHW	KITCHEN HOT WATER SUPPLY LINE (140°F)
	HOT WATER RETURN LINE
G	NATURAL GAS PIPING
VTR	VENT THRU ROOF
C.O. (W)	CLEAN OUT (W) DENOTES WALL
	TIE-IN POINT
	ISOLATION VALVE
	CHECK VALVE
	DENOTES 'STOP' VALVE AT FIXTURE
HB FF	HOSE BIB W/VACUMN BREAKER (FF DENOTES FROST FREE)
	FLOOR DRAIN
	FLOOR SINK

FIXTURE LEGEND	
P1	WALL MOUNT TOILET
P1F	FLOOR MOUNT TOILET
P2	URINAL
P3	COUNTER LAVATORY
P4	WALL HUNG LAVATORY
P5	COUNTER SINK
P6	SHOWER
P7	MOP RECEPTOR
P8	FLOOR TROUGH
P9	FLOOR DRAIN
P10	FLOOR SINK
P11	3-COMPARTMENT SINK
P12	EMERGENCY EYEWASH
P13	WATER DISPENSER
DW	DISHWASHER

studio 1200, LLC
511 MILLBURN AVENUE
SHORT HILLS, NJ 07078
973.376.5111
973.376.5011
www.studio1200.com
CERITFICATE OF AUTHORIZATION # AC-710

Nancy Dougherty, AIA, LEED
NJ-AI 14861/NY-025099/CT-ARI.0011798

MEP CONSULTANT:
Roxbury Engineering Associates, L.L.C.
3 Gold Mine Road
Flanders, NJ 07836
Phone: (973) 252-6973
Fax: (973) 252-7028
COA: 24GA28096600
Rick Macieko, PE
NJ PE: 37111 USVI PE: 0-4263-1B
NY PE: 087618 MD PE: 50005
PA PE: 0777177 CT PE: 32573

REA PROJECT NO. 18-1451

STATE OF NEW JERSEY
RICHARD MACIEKO
No. GE37111
MECHANICAL
PROFESSIONAL ENGINEER

NO	ISSUE	DATE
1	ISSUED FOR BID & PERMIT	10/24/18
2	NJSEA PERMIT REVIEW	12/4/18
3	REVISED PER NJSEA COMMENTS	01/02/19
4	REVISED PER DUST COLLECTION RECEP. & MILL AREA EXHAUST	01/24/19
5	REVISED PER NJSEA COMMENTS	02/07/19
6	CONTRACT CONFORMANCE SET	02/20/19

BOLERO SNORT BREWERY
316 20TH STREET
CARLSTADT, NJ

ROOF GAS NEW WORK PLAN

P2.2

PLUMBING FIXTURE SCHEDULE

FIXTURE	DESCRIPTION	BRANCH PIPE CONNECTION DRAIN	VENT	TRAP	HW	CW	DFU	SFU	REMARKS
P1	FLOOR MOUNT TOILET	4"	2"	INTERNAL	-	1-1/4"	4	4	AMERICAN STANDARD MADERA TOILET, #2305.100, PROVIDE CHURCH #9500C OPEN SEAT PROVIDE AMERICAN STANDARD SELECTRONIC FLOWISE EXPOSED FLUSH VALVE, 120V-HARD WIRED AC TRANSFORMER
P2	URINAL	2"	2"	2"	-	3/4"	4	4	AMERICAN STANDARD WASHBROOK MODEL 6561.017 VITREOUS CHINA, FURNISH WITH WALL HANGERS. PROVIDE SELECTRONIC FLOWWISE EXPOSED 0.5 GPF FLUSH VALVE, 120V-HARD WIRED AC TRANSFORMER.
P3	COUNTER LAVATORY	1-1/2"	1-1/2"	1-1/2"	1/2"	1/2"	1	1	AMERICAN STD. OVALYN - #9482, WITH SLOAN SF-2350 BATTERY POWERED FAUCET WITH BELOW DECK TEMPERATURE MIXING VALVE MIX-60-A, MCGUIRE #8902 P TRAP, 155A GRID DRAIN SUPPLY MCGUIRE 2165LK LOOSE KEY STOPS
P4	WALL HUNG LAVATORY	1-1/2"	1-1/2"	1-1/2"	1/2"	1/2"	1	1	AMERICAN STANDARD DECLYN LAVATORY 0321.075, 4" CENTERS,VITREOUS CHINA, FRONT OVERFLOW WITH SELF DRAINING DECK AREA. PROVIDE JAY R. SMITH SERIES 700 CONCEALED BRACKET SUPPORT. PROVIDE COLONY 2175.502 FAUCET, GRID STRAINER AND MCGUIRE MODEL NO: PW 2125 WC PRE-WRAPPED DRAIN AND STOPS. MOUNT RIM 34" A.F.F.
P5	COUNTER SINK	1-1/2"	1-1/2"	1-1/2"	1/2"	1/2"	1	1	ELKAY MODEL BCR15 SINGLE BOWEL SINK, WITH MOEN TWO-HANDLE CLINIC FAUCET #8948
P6	SHOWER	2"	2"	2"	1/2"	1/2"	2	2	FREEDOM ADA TRANSFER SHOWER MODEL APFQ3698BF625, 39"x39" SHOWER ENCLOSURE WITH SEAT. PROVIDE AMERICAN STANDARD COMMERCIAL SHOWER SYSTEM 1662SG.223 WITH PRESSURE BALANCED VALVE, OMIT TUB FAUCET.
P7	MOP RECEPTOR	2"	1-1/2"	2"	1/2"	1/2"	2	2	FIAT MSB 2424 MOP SERVICE BASIN WITH SERVICE FAUCET #830-AA WITH VACUUM BREAKER, HOSE AND HOSE BRACKET #832-AAW.
P8	FLOOR TROUGH	3"	2"	2"	-	-	3	-	ZURN MODEL 886-S1 HDPE TRENCH DRAIN SYSTEM, 6-1/4"W x 80"L WITH HEEL PROOF POLYETHYLENE GRATE (TRENCH SYSTEM TO BE APPROVED BY OWNER)
P9	FLOOR DRAIN	3"	2"	3"	-	-	-	-	JR SMITH MODEL 2220 SEDIMENT BUCKET, NICKEL BRONZE TOP, NO-HUB ADAPTER, DEEP SEALED TRAP- JR SMITH FIG. 7222S WITH PROVENT TRAP GUARD WATER SEAL
P10	FLOOR SINK	3"	2"	2"	-	-	3	-	ZURN MODEL Z-1901 SERIES 12"x12"x8"D WITH DOME STRAINER REFER TO PLAN FOR REQUIRED DIAMETER & GRATING TYPE
P11	3-COMPARTMENT SINK	2"	-	-	1/2"	1/2"	-	-	ADVANCE TABCO REGALINE #T9-3-54-18RL, 16"x20", 3-COMPARTMENT SINK WITH (2) WALL MOUNTED FAUCETS AS SELCTED BY OWNER, INDIRECT DRAIN TO FLOOR SINK.
P12	EMERGENCY EYEWASH	2"	1-1/2"	1-1/2"	-	-	-	-	SELF CONTAINED EMERGENCY EYEWASH STATION AS SELECTED BY OWNER.
P13	WATER DISPENSER	2"	1-1/2"	1-1/2"	-	-	-	-	ELKAY COLUMN TAP WATER DISPENSER STAINLESS STEEL MODEL DSC2K. COORDINATE WITH OWNER.
P15	KITCHEN SINK	1-1/2"	1-1/2"	1-1/2"	1/2"	1/2"	1	1	RUVATI UNDERMOUNT STAINLESS STEEL DOUBLE BOWL KITCHEN SINK. DELTA COMMERCIAL 2 HANDLE CHROME KITCHEN FAUCET WITH LEVER BLADE HANDLES.

6

PLUMBING FIXTURE NOTES:
1. ALL PLUMBING APPARATUS ARE DESIGNED FOR THE FOLLOWING:
   a. SINK & LAVATORY FAUCETS 2.5 GPM
   b. URINALS 1 GALLON/FLUSH (MAX.)
   c. TOILETS 1.6 GALLON/FLUSH (MAX.)
2. ALL TOILETS ARE ADA COMPLIANT WITH TOP OF SEAT INSTALLED 17" TO 19" A.F.F.
3. PROVIDE INSULATED PIPE PROTECTION ON ALL EXPOSED SUPPLY AND WASTE LINES BENEATH HANDICAPPED ACCESSIBLE SINKS. PIPE PROTECTION SHALL BE BY TRU-BRO OR EQUIVALENT.

GWH 1 DIRECT VENT GAS WATER HEATER

AO SMITH WATER HEATER MODEL BT-60, 55 GALLONS, 60 MBH, 73 GPH@ 80°F TEMP RISE, 1" WATER CONNECTIONS, 5 FLA @120V. PROVIDE 3" PVC INTAKE & VENT PIPING, T&P RELIEF VALVE, 24"Φx55-1/4"H.

TWH 1 TANKLESS WATER HEATER

HTP WATER HEATER MODEL RTC-199, 11 GPH @ 35°F TEMP RISE, 3/4" WATER CONNECTIONS, 135W @ 120V, 17.3"Lx14.8"Wx27.6"H 88 LBS. PROVIDE 3" PP CONCENTRIC VENT KIT.

PLUMBING GENERAL NOTES

1. THE PLUMBING CONTRACTOR SHALL FURNISH ALL LABOR, MATERIAL, AND EQUIPMENT REQUIRED FOR THE COMPLETION AND OPERATION OF ALL SYSTEMS IN THIS SECTION OF WORK IN ACCORDANCE WITH THE NATIONAL STANDARD PLUMBING CODE-2015
2. THE PLUMBING CONTRACTOR SHALL FURNISH AND INSTALL A COMPLETE DOMESTIC COLD WATER, HOT WATER AND SANITARY SEWER SYSTEM TO ALL FIXTURES AND OR EQUIPMENT REQUIRING SUCH. VERIFY ALL ROUGH-IN LOCATIONS AND COORDINATE PIPING LOCATIONS WITH WORK UNDER OTHER DIVISIONS OFTHE SPECIFICATIONS TO AVOID CONFLICTS.
3. THE PLUMBING CONTRACTOR SHALL SECURE ALL PERMITS, INSPECTION CERTIFICATES, ETC. AND PAY ALL CHARGES CONNECTED WITH SAME.
4. THE PLUMBING CONTRACTOR SHALL FIELD VERIFY ALL EXISTING CONDITIONS PRIOR TO CONSTRUCTION AND NOTIFY THE ENGINEER OF RECORD OF ANY DISCREPANCIES BETWEEN THE PLANS AND EXISTING CONDITIONS AND/OR POTENTIAL PROBLEMS HE OBSERVES BEFORE CONTINUING WORK.
5. DO NOT SCALE THE PLANS, SEE ARCHITECTURAL PLANS FOR EXACT LOCATION OF DOORS, WINDOWS, FIXTURES, WALL DIMENSIONS, ETC.
6. ALL FIXTURES SHALL BE COMPLETE AND INCLUDE SUPPLIES, STOPS, VALVES, FAUCETS, DRAINS, TRAPS, TAIL PIECES, ESCUTCHEONS, ETC. TRAPS FOR ALL LAVATORIES SHALL BE REMOVABLE. LOCATE VALVES IN A READILY ACCESSIBLE LOCATION.
7. ALL VALVES, CLEAN OUTS, ETC., SHALL BE SO LOCATED AND INSTALLED TO PERMIT ACCESS FOR SERVICE WITHOUT DAMAGE TO BUILDING OR FINISHED MATERIALS.
8. ALL MATERIALS SHALL BE NEW AND SHALL FIT THE SPACE AVAILABLE, VERIFY DIMENSIONS AT SITE.
9. ALL PIPING, APPARATUS, EQUIPMENT, ETC., SHALL BE PROPERLY SUPPORTED, BRACED VERTICALLY AND HORIZONTALLY IN ACCORDANCE WITH APPLICABLE CODES AND AS REQUIRED TO PREVENT EXCESSIVE MOVEMENT DURING SEISMIC CONDITIONS.
10. ALL UNDERGROUND SANITARY WASTE PIPING SHALL BE DWV, SCHEDULE 40, P.V.C. PIPE AS PER ASTM D2665.
11. ALL SANITARY OR WASTE PIPING 3" AND SMALLER SHALL BE SLOPED AT 1/4" PER FOOT MINIMUM. ALL SANITARY OR WASTE PIPING 4" AND LARGER SHALL BE SLOPED AT 1/8" PER FOOT MIMIMUM.
12. EXPOSED WASTE PIPING IN REST ROOM AREAS SHALL BE CHROME PLATED BRASS, WITH MATCHING STOPS AND ESCUTCHEONS.
13. DOMESTIC WATER PIPING SHALL BE WROUGHT SEAMLESS COPPER, TYPE 'L' WITH 95-5 SILVER SOLDERED JOINTS; (ASTM B 88). NO LEAD SHALL BE USED.
14. ALL DOMESTIC WATER PIPING SHALL BE INSTALLED LEVEL WITHOUT PITCH. DO NOT RUN DOMESTIC HOT WATER PIPING WITHIN 6" OF DOMESTIC COLD WATER PIPING.
15. COPPER PIPING SHALL BE PROTECTED AGAINST CONTACT WITH DISSIMILAR METALS. ALL HANGERS, SUPPORTS, ANCHORS AND CLIPS SHALL BE COPPER OR COPPER PLATED. WHERE COPPER PIPING IS CARRIED ON IRON TRAPEZE HANGERS WITH OTHER PIPING, SATISFACTORY AND PERMANENT ELECTROLYTIC ISOLATION MATERIAL SHALL PREVENT CONTACT WITH OTHER METALS.
16. COPPER PIPING SHALL BE PROTECTED AGAINST CONTACT WITH ALL MASONRY. WHERE COPPER IS SLEEVED THROUGH MASONRY, COPPER OR RED BRASS SLEEVES SHALL BE USED. WHERE COPPER MUST BE CONCEALED IN OR AGAINST MASONRY PARTITIONS, CONTACT SHALL BE PREVENTED BY COATING THE COPPER HEAVILY WITH ASPHALTIC ENAMEL AND 15# ASPHALT SATURATED FELT BETWEEN THE PIPE AND MASONRY PARTITION.
17. ALL WATER PIPING ABOVE GRADE SHALL BE INSULATED WITH 1" RIGID FIBERGLASS IN AN ALL SERVICE JACKET WITH ALL JOINTS AND SEAMS SEALED WITH A VAPOR BARRIER MASTIC.
18. ALL WATER PIPING BELOW GRADE SHALL BE INSULATED WITH WITH 1/2" FLEXIBLE FOAM INSULATION. FLEXIBLE FOAM INSULATION SHALL NOT BE SPLIT AND SHALL BE TAPED AT ALL BUTT JOINTS.
19. WATER PIPING SHALL NOT BE INSTALLED IN AREAS SUBJECT TO FREEZING TEMPERATURES. WATER PIPING IN EXTERIOR WALLS SHALL BE INSTALLED ON CONDITIONED SIDE OF THE WALL INSULATION.
20. PROVIDE AIR CHAMBERS, SUPPLIES AND STOPS AT EACH FIXTURE. EXPOSED STOPS SHALL BE CHROME PLATED.
21. PROVIDE DRAIN VALVES AT ALL LOW POINTS OF DOMESTIC WATER PIPING SYSTEMS FOR COMPLETE DRAINAGE AND INDICATE LOCATION OF SAME ON RECORD DRAWINGS.
22. PROVIDE VACUUM BREAKER AS REQUIRED BY CODE.
23. NATURAL GAS PIPING AND FITTINGS SHALL BE SHALL BE SCHEDULE 40, BLACK STEEL PIPE, TYPE S, SEAMLESS, GRADE B; (ASTM A 53).
24. PROVIDE GAS COCKS, STRAINERS, AND REGULATORS (AS RECOMMENDED BY THE EQUIPMENT MANUFACTURER) FOR ALL EQUIPMENT CONNECTED TO THE NATURAL GAS SYSTEM.
25. MAXIMUM SPACING FOR GAS PIPING HANGER RODS SHALL BE 7'-0". MAXIMUM SPACING FOR TRANSVERSE BRACING SHALL BE 20'-0" O.C. TRANSVERSE BRACING FOR ONE SECTION MAY ACT AS LONGITUDINAL BRACING FOR THE PIPE SECTION CONNECTED TO IT IF THE BRACING IS INSTALLED WITHIN 24" OF THE ELBOW OR TEE.
26. ALL EXTERIOR GAS PIPING SHALL BE PAINTED YELLOW AND LABELED GAS.

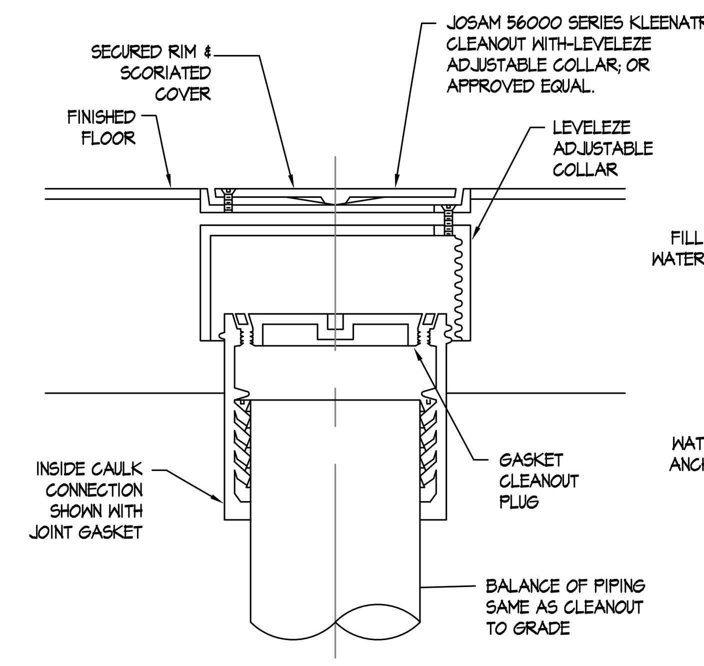

FLOOR CLEANOUT DETAIL
SCALE: NONE

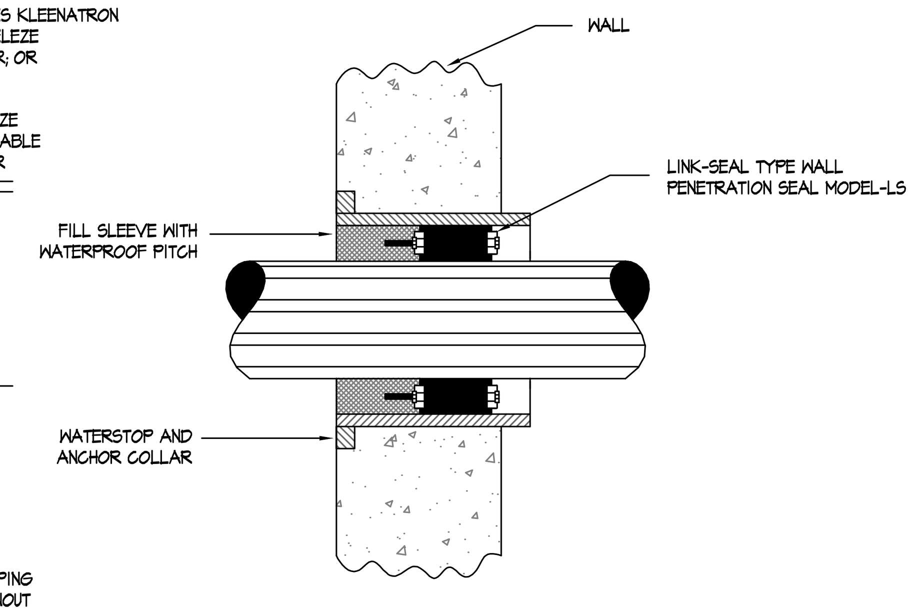

WALL PENETRATION DETAIL
SCALE: NONE

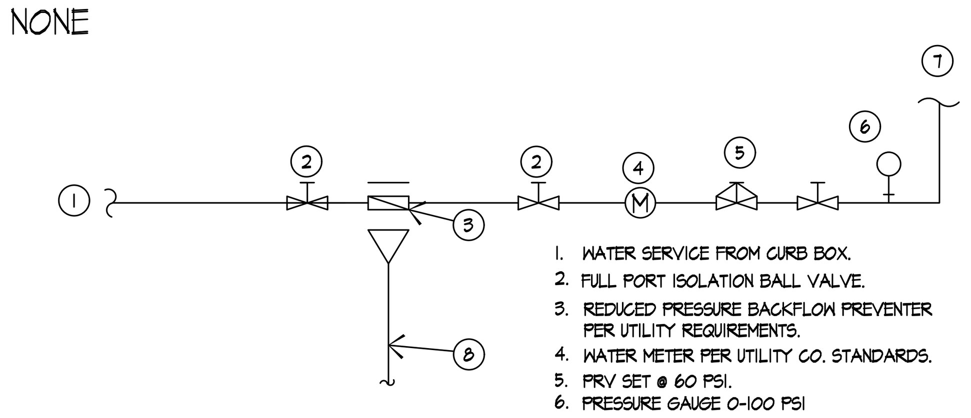

1. WATER SERVICE FROM CURB BOX.
2. FULL PORT ISOLATION BALL VALVE.
3. REDUCED PRESSURE BACKFLOW PREVENTER PER UTILITY REQUIREMENTS.
4. WATER METER PER UTILITY CO. STANDARDS.
5. PRV SET @ 60 PSI.
6. PRESSURE GAUGE 0-100 PSI
7. DOMESTIC WATER OUT TO BLDG.
8. 3/4" PIPE TO FLOOR DRAIN.

NOTE: INSTALL WATER METER AND VALVES AS REQUIRED BY WATER UTILITY.

WATER SERVICE BACKFLOW/METER PIPING DETAIL
SCALE: NONE

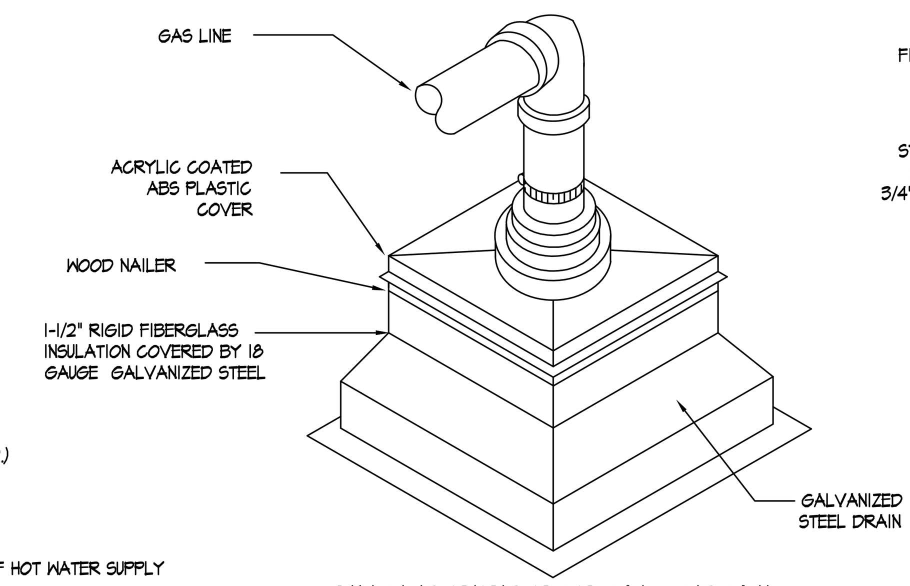

SINGLE PIPE PORTAL DETAIL
SCALE: NONE

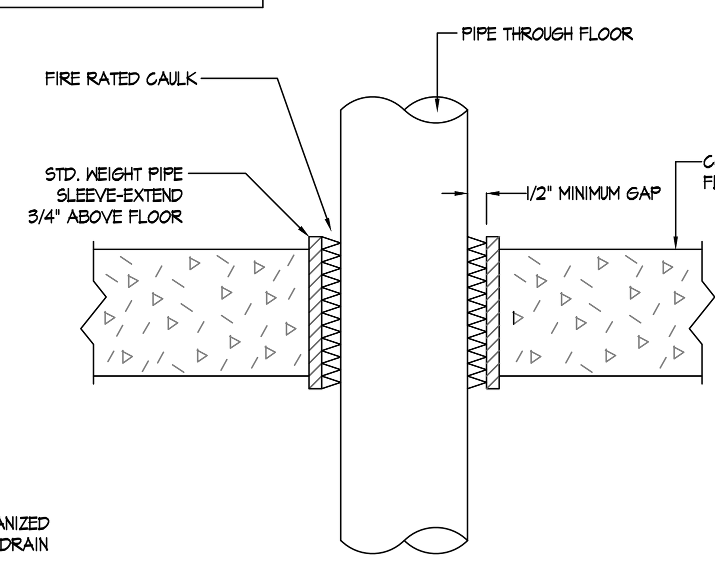

PIPE SLEEVE THROUGH FLOOR DETAIL
SCALE: NONE

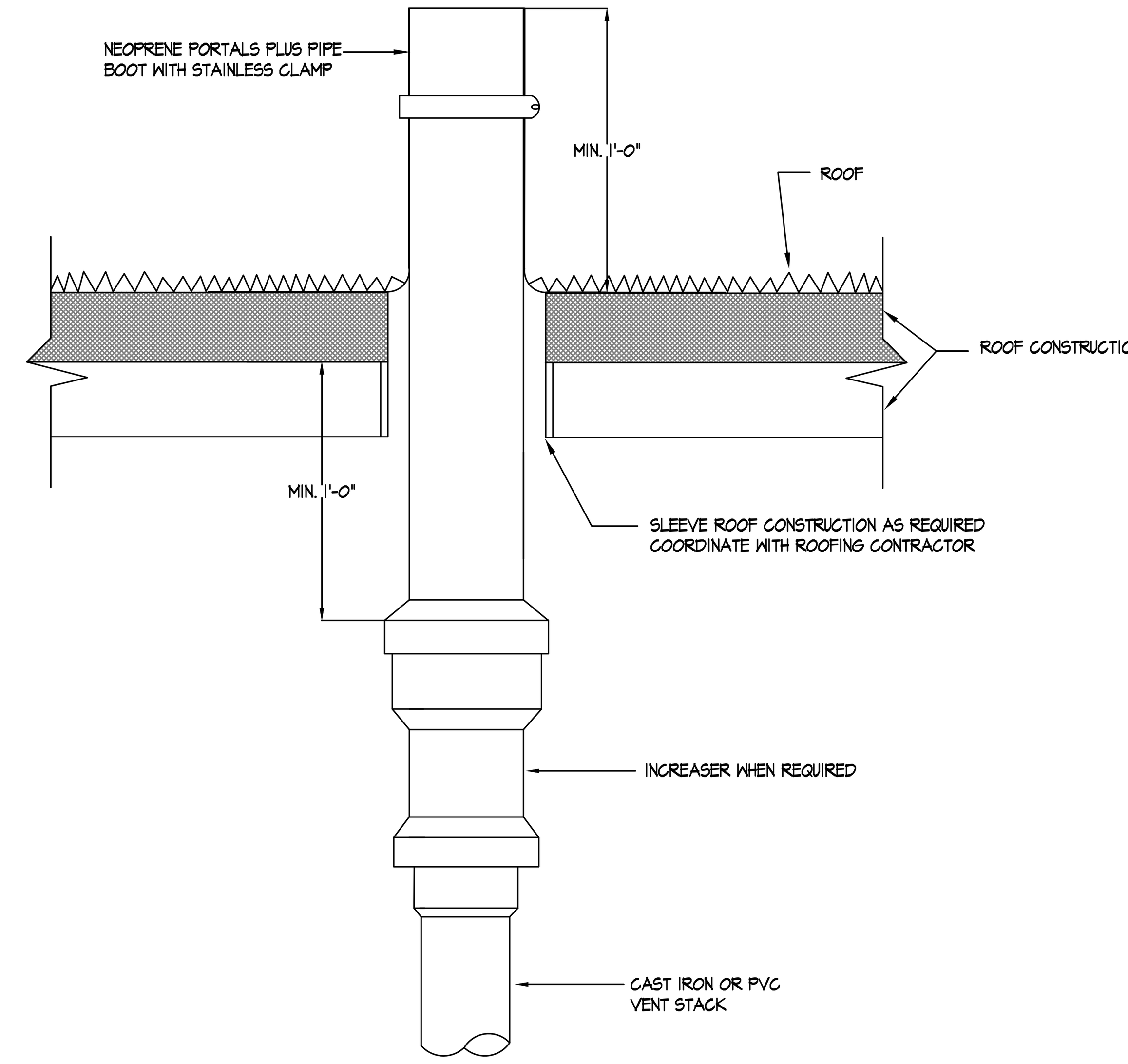

VENT THRU ROOF
SCALE: NONE

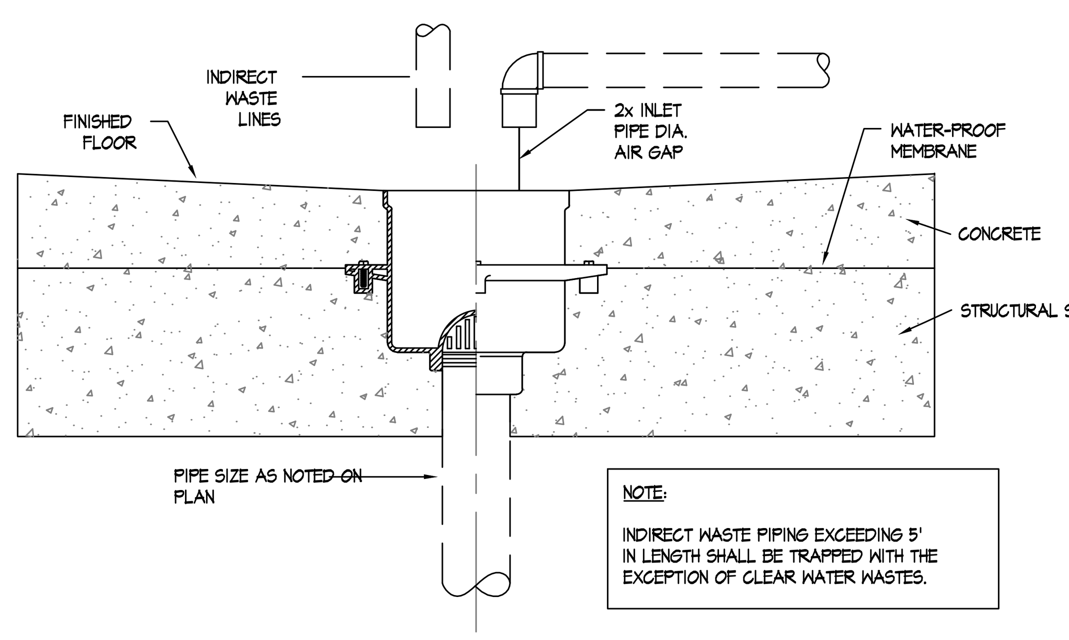

NOTE:
INDIRECT WASTE PIPING EXCEEDING 5' IN LENGTH SHALL BE TRAPPED WITH THE EXCEPTION OF CLEAR WATER WASTES.

FLOOR SINK DETAIL
SCALE: NONE

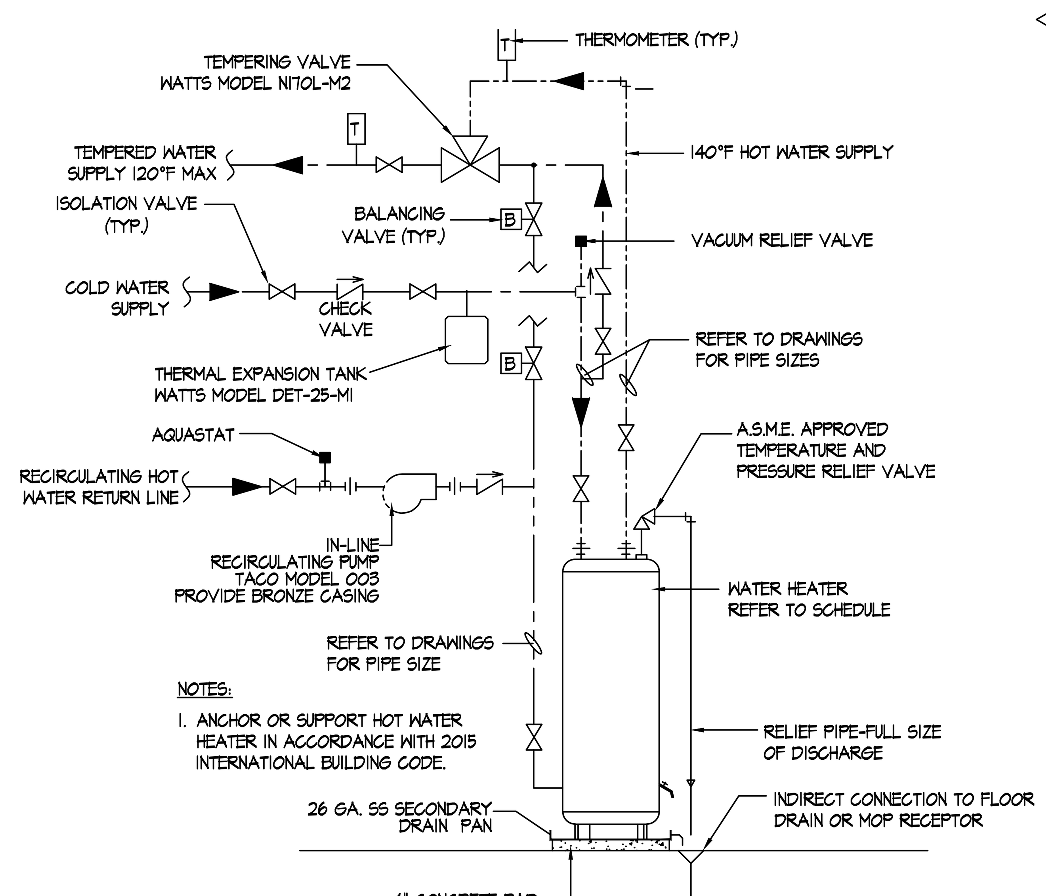

NOTES:
1. ANCHOR OR SUPPORT HOT WATER HEATER IN ACCORDANCE WITH 2015 INTERNATIONAL BUILDING CODE.

GAS WATER HEATER DETAIL
SCALE: NONE

DESIGN DATA FOR C-CLAMP HANGER

Nominal Pipe Size	Minimum A Dimension inches	Hanger Takeout inches	Rod Diameter inches
1/2	3 1/2	-1 1/4	3/8
3/4	3 1/2	-1 1/4	3/8
1	3 1/2	-1 1/4	3/8
1 1/4	3 3/4	-1 1/2	3/8
1 1/2	4	-1 1/2	3/8
2	4 1/4	-1 3/4	3/8
2 1/2	5	-2 1/4	3/8
3	5 1/2	-2 1/2	3/8
4	6	-3	3/8
5	6 3/4	-3 3/4	1/2
6	7 3/4	-4 1/2	1/2
8	9 1/4	-6	1/2

Components:
1. C-Clamp
2. Set Screw
3. Lock Nut
4. Hanger Rod
5. Adjustable Hanger Ring
6. Steel Beam or Bar Joist

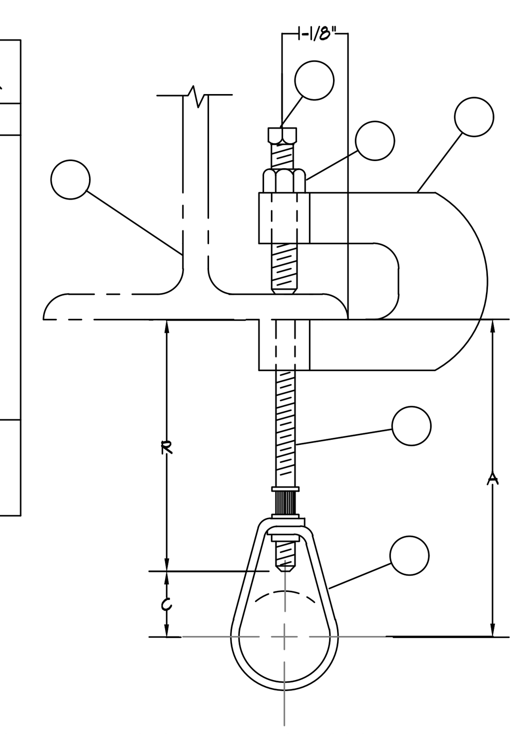

STANDARD C-CLAMP PIPE HANGER
SCALE: NONE

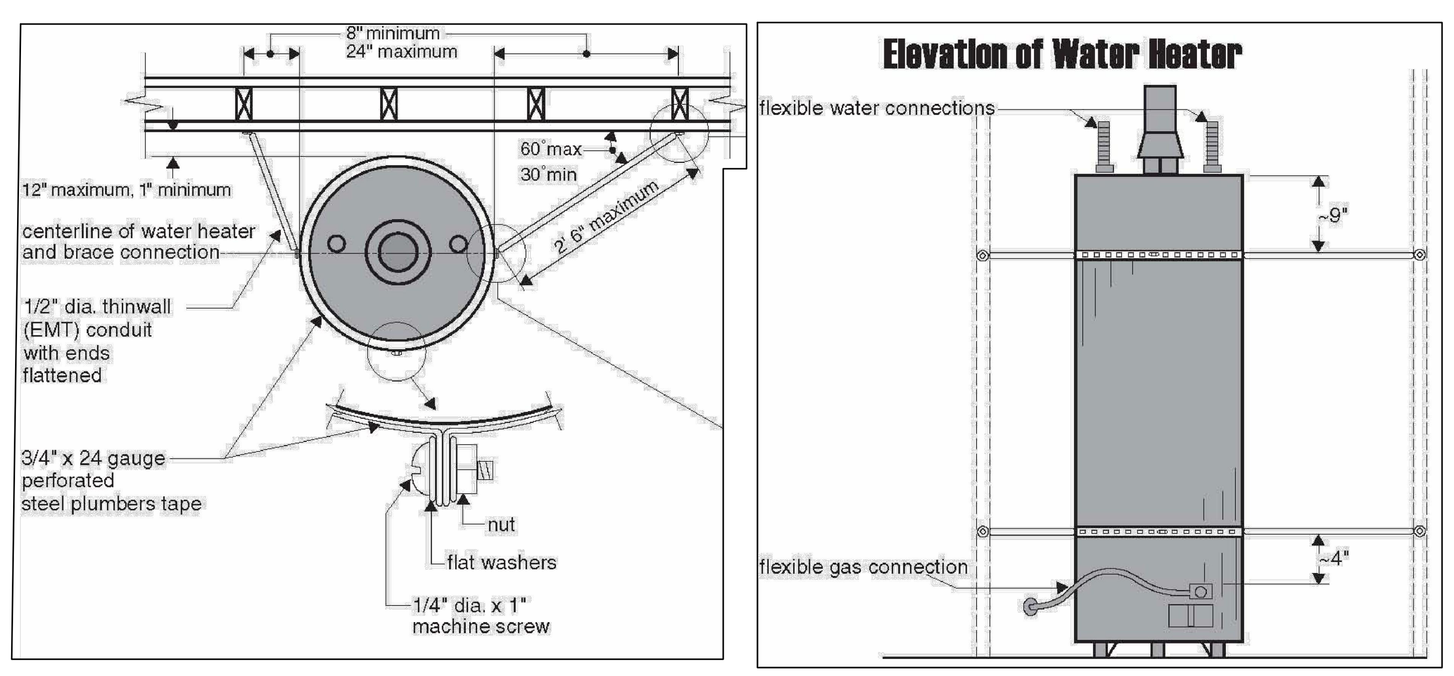

WATER HEATER BRACING DETAIL
SCALE: NONE

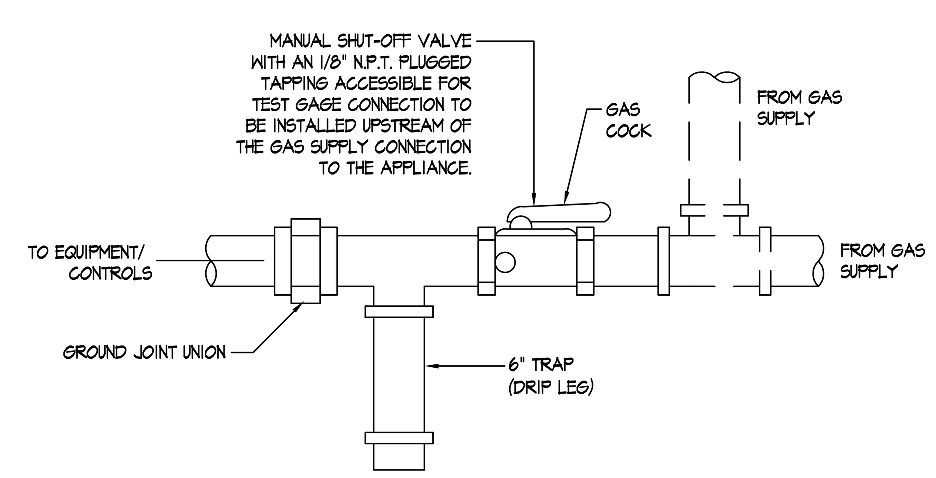

GAS CONNECTION TO EQUIPMENT DETAIL
SCALE: NONE

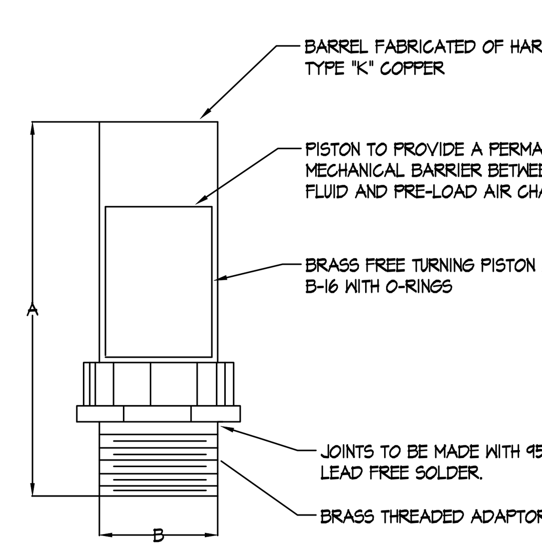

PPP SIZE	P.D.I. SYMBOL	FIXTURE UNIT RATINGS	A SIZE	B SIZE
1/2"	A	1 - 11	5"	1/2"
3/4"	B	12 - 32	5"	3/4"
1"	C	33 - 60	7"	1"
1-1/4"	D	61 - 113	7"	1-1/4"
1-1/2"	E	114 - 154	9"	1-1/2"
2"	F	155 - 330	9"	2"

NOTE: SEE WATER RISER DIAGRAMS FOR LOCATIONS OF SHOCK ABSORBERS.

WATER SHOCK ARRESTOR DETAIL
SCALE: NONE

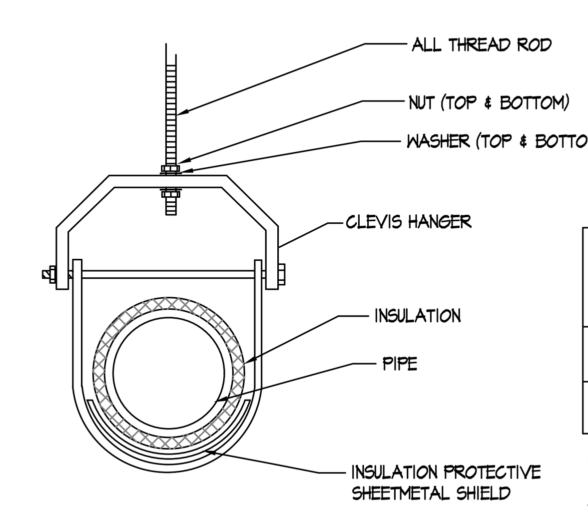

TYPICAL CLEVIS HANGER DETAIL
SCALE: NONE

PIPE SIZE	MAX. SPACING (FT.) THREADED PIPE	COPPER TUBING	CAST IRON "NO-HUB"
1" & SMALLER	6'-0"	6'-0"	5'-0"
1-1/4" & LARGER	10'-0"	10'-0"	5'-0"

1. ALL "NO-HUB" PIPING SHALL BE SUPPORTED IN BACK OF EVERY JOINT.
2. PROVIDE HANGERS ON EVERY BRANCH LINE 4'-0" OR LONGER.

HORIZONTAL PIPE SUPPORT SCHEDULE

studio 1200, LLC
511 MILLBURN AVENUE
SHORT HILLS, NJ 07078
973.376.5111
973.376.5011
www.studio1200.com
CERITFICATE OF AUTHORIZATION # AC-710

Nancy Dougherty, AIA, LEED
NJ-AI 14861/NY-025099/CT-ARI.0011798

MEP CONSULTANT:
Roxbury Engineering Associates, L.L.C.
3 Gold Mine Road
Flanders, NJ 07836
Phone: (973) 252-6973
Fax: (973) 252-7028
COA: 24GA28096600
Rick Macieko, PE
NJ PE: 37111 USVI PE: 0-4263-1B
NY PE: 087618 MD PE: 50005
PA PE: 0777177 CT PE: 32573

REA PROJECT NO. 18-1451

STATE OF NEW JERSEY RICHARD MACIEKO No. GE37111 LICENSED PROFESSIONAL ENGINEER

NO	ISSUE	DATE
1	ISSUED FOR BID & PERMIT	10/24/18
2	NJSEA PERMIT REVIEW	12/4/18
3	REVISED PER NJSEA COMMENTS	01/02/19
4	REVISED PER DUST COLLECTION RECEP. & MILL AREA EXHAUST	01/24/19
5	REVISED PER NJSEA COMMENTS	02/07/19
6	CONTRACT CONFORMANCE SET	02/20/19

BOLERO SNORT BREWERY
316 20TH STREET
CARLSTADT, NJ

PLUMBING SCHEDULE & DETAILS

P3.0

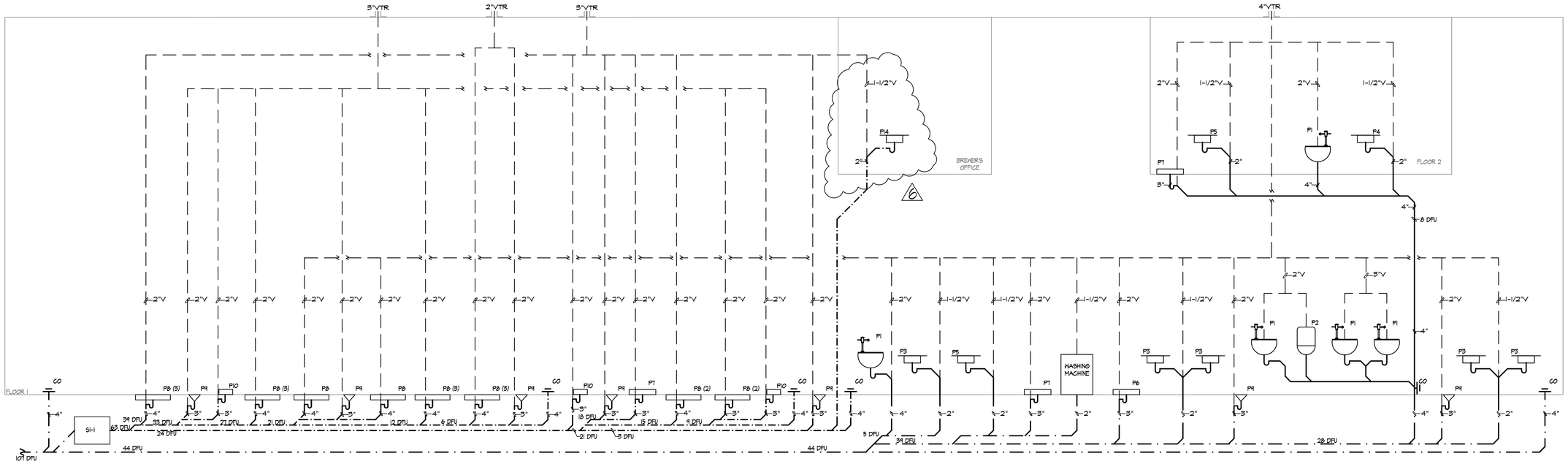

SANITARY & VENT STACK DIAGRAM
SCALE: NTS

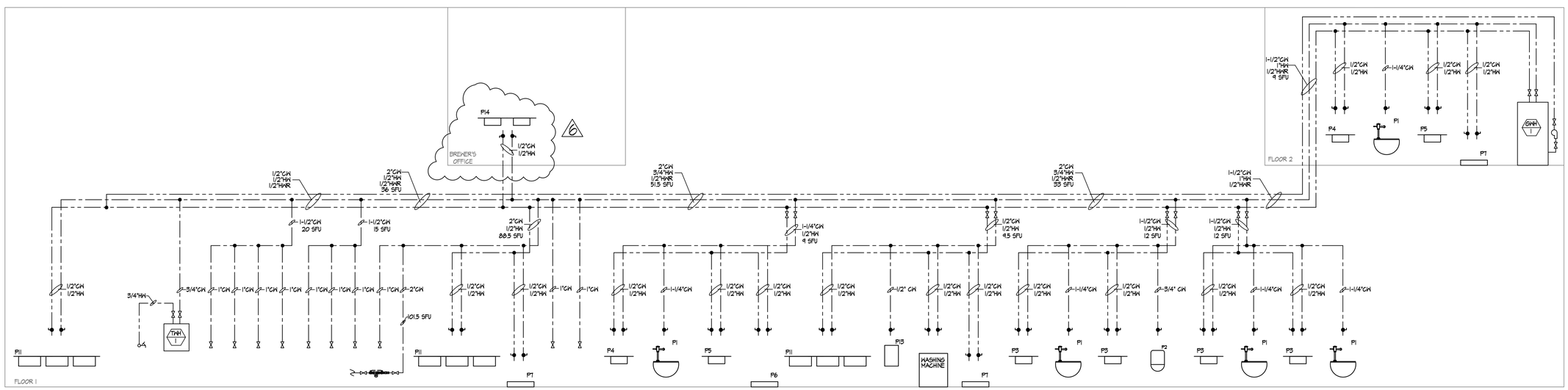

DOMESTIC WATER RISER DIAGRAM
SCALE: NTS

studio 1200, LLC
511 MILLBURN AVENUE
SHORT HILLS, NJ 07078
973.376.5111
973.376.5011
www.studio1200.com
CERITFICATE OF AUTHORIZATION # AC-710

Nancy Dougherty, AIA, LEED
NJ-AI 14861/NY-025099/CT-ARI.0011798

MEP CONSULTANT:
Roxbury Engineering Associates, L.L.C.
3 Gold Mine Road
Flanders, NJ 07836
Phone: (973) 252-6973
Fax: (973) 252-7028
COA: 24GA28096600
Rick Macieko, PE
NJ PE: 37111 USVI PE: 0-4263-1B
NY PE: 087618 MD PE: 50005
PA PE: 0777177 CT PE: 32573

REA PROJECT NO. 18-1451

NO	ISSUE	DATE
1	ISSUED FOR BID & PERMIT	10/24/18
2	NJSEA PERMIT REVIEW	12/4/18
3	REVISED PER NJSEA COMMENTS	01/02/19
4	REVISED PER DUST COLLECTION RECEP. & MILL AREA EXHAUST	01/24/19
5	REVISED PER NJSEA COMMENTS	02/07/19
6	CONTRACT CONFORMANCE SET	02/20/19

BOLERO SNORT BREWERY
316 20TH STREET
CARLSTADT, NJ

PLUMBING RISER DIAGRAMS

P4.0

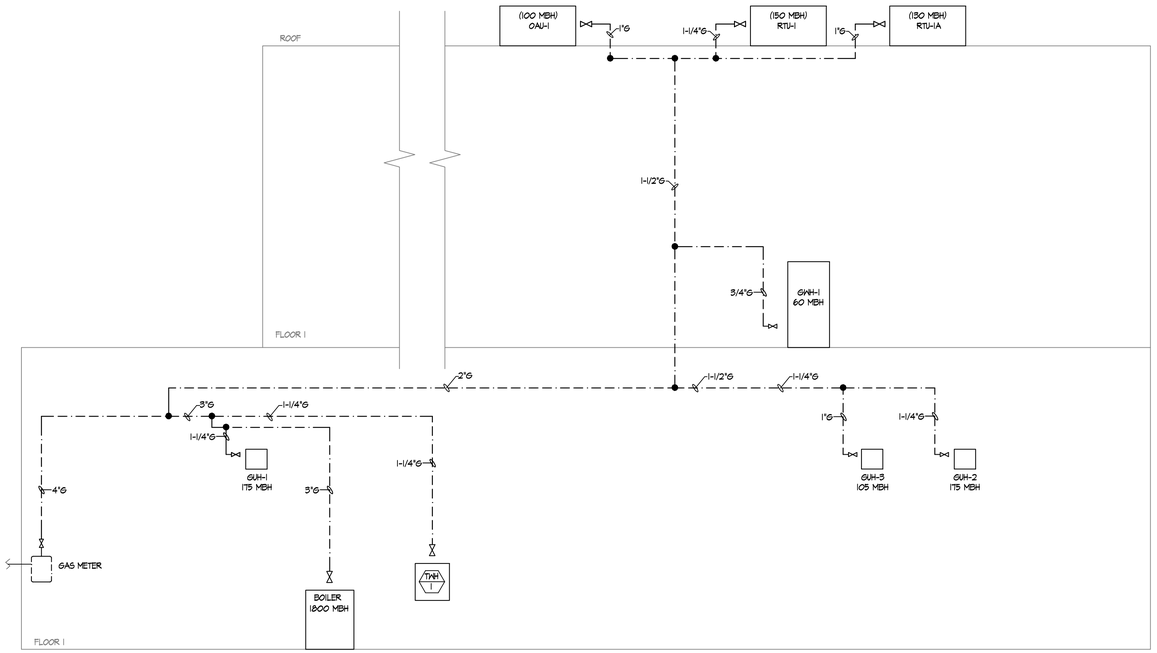

GAS RISER DIAGRAM
SCALE: NTS

studio 1200, LLC
511 MILLBURN AVENUE
SHORT HILLS, NJ 07078
973.376.5111
973.376.5011
www.studio1200.com
CERITFICATE OF AUTHORIZATION # AC-710

Nancy Dougherty, AIA, LEED
NJ-AI 14861/NY-025099/CT-ARI.0011798

MEP CONSULTANT:
Oxbury Engineering Associates, L.L.C.
3 Gold Mine Road
Flanders, NJ 07836
Phone: (973) 252-6973
Fax: (973) 252-7028
COA: 24GA28096600
Rick Macieko, PE
NJ PE: 37111 USVI PE: 0-4263-1B
NY PE: 087618 MD PE: 50005
PA PE: 0777177 CT PE: 32573
REA PROJECT NO. 18-1451

NO	ISSUE	DATE
1	ISSUED FOR BID & PERMIT	10/24/18
2	NJSEA PERMIT REVIEW	12/4/18
3	REVISED PER NJSEA COMMENTS	01/02/19
4	REVISED PER DUST COLLECTION RECEP. & MILL AREA EXHAUST	01/24/19
5	REVISED PER NJSEA COMMENTS	02/07/19
6	CONTRACT CONFORMANCE SET	02/20/19

BOLERO SNORT BREWERY
316 20TH STREET
CARLSTADT, NJ

GAS RISER DIAGRAM

P4.1

GENERAL REQUIREMENTS

a. The drawings and specifications have been prepared in sufficient detail to enable one proficient in the art of Plumbing and Drainage Construction to enter into an equitable contract and carry out the work in the true spirit of the designers intentions in accordance with the best practice for this class of work. No attempt has been made to detail items of materials or labor that are selfevident as necessary to effect a complete and perfect operating installation. Contractor shall furnish any and all items that may be required for the proper functioning of the system.

SCOPE OF WORK

a. Furnish all labor, materials, equipment, and permits necessary for proper completion of all new work as required by this specification and the applicable drawings.

b. In general the work consists of the following:

1. Cold and hot water piping and fixture connections.
2. Plumbing fixtures and drains.
3. Pipe covering and insulation.
4. Hangers, supports, inserts, etc.
5. Natural gas piping.
6. Obtaining and paying for all permits in connection with plumbing and drainage.
7. Shop drawings.
8. Tests and inspections.
9. Guarantees.

RELATED WORK OF OTHER SECTIONS

a. The following work will be executed under other sections of this specification:

1. All electrical wiring and conduit.
2. HVAC equipment.
3. All finish painting, except for shop coats.
4. Cabinets, counter tops, shelving, etc.

PERMITS, RULES, AND REGULATIONS

a. Obtain and pay for all licenses, permits, and inspection fees in connection with the work of this Section.

b. Furnish required certificate of approvals of installation upon completion of work.

MATERIALS AND WORKMANSHIP

a. All materials shall be new, conforming to Standards as specified.

b. All labor shall be performed by skilled mechanics under experienced superintendence. All work shall be properly executed presenting a neat and workmanlike appearance subject to Owner's approval.

PROTECTION OF WORK AND MATERIAL

a. Take all precautions and be responsible for proper care and protection of all portions of all materials delivered and work performed, until the completion and acceptance of the work as a whole and issuance of certificates for final payment of such Contract.

b. Cap all incomplete lines until ready for final connections after which they shall be thoroughly cleaned and left undestructed.

c. Any and all portions of the work liable to damage by reason of operation and conducted under this Section, by weather or by others engaged on the work, must be securely protected by temporary but substantial boarding or covering which must be maintained in position until not required, and its removal is approved by Owner.

CONTRACT DRAWINGS

a. Drawings accompanying these specifications are intended to show only general arrangements and extent of all work to be done. Determine exact location and arrangement of all work as work progresses.

b. Locations of equipment, outlets, etc., shown on drawings are approximately correct but are subject to such modifications as may be found necessary or desirable at time of installation in order to meet any structural conditions and avoid interference with other work or equipment provided by the Owner. Make such changes as are required without extra cost.

SHOP DRAWINGS

a. In accordance with General Conditions submit for approval, all necessary shop or installation drawings or diagrams as may be required to make work performance clear.
b. Submittals shall include, but not be limited to:

1. Plumbing fixtures and trim.
2. Floor drains, cleanouts, etc.

INSTALLATION OF PIPING

a. Cooperate with all other Contractors for the installation of all domestic water mains, waste lines, sanitary lines, vents, etc., so as to clear ventilating and air ducts, equipment, etc.

b. Provide offsets in piping whether or not indicated on drawings so as to clear work of other Sections.

c. Install piping in neat orderly manner, free from haphazard scattered runs.

d. Run, arrangement, position, connection, etc., of pipes, fixtures, valves, etc., shown on drawings are taken as a close approximation, and while they shall be followed, right is reserved to change locations, etc., to accommodate conditions arising during progress of work without additional compensation.

e. Maintain maximum uniform pitch on all soil, waste, and vent lines.

f. No pipe or apparatus to interfere in any way with door swing.

g. Vents above roof shall be not less than 3".

h. Eccentric reducing fittings shall be used for all pipe size changes. No bushings will be permitted.

i. Supports shall be designed to permit free expansion and contraction while minimizing vibration. All piping to be anchored as required with heavy steel clamps, base ells, tees, or approved anchors securely fastened to pipe and rigidly attached to building or separate foundations furnished under this Section.

j. Screw threads shall be cut clean and true. All pipes reamed out after cutting to remove burrs.

k. No cutting or threading of piping shall be done on concrete floor areas.

l. Screw joints shall be made up tight without red or white lead caulking.

m. Solder fittings of capillary type using solder with melting point above 460°F. Solder 95% tin and 5% antimony (no lead.)

n. Plumbing Contractor shall be responsible for the quiet operation of the new water supply systems. Provide water hammer arrestors for each cold and hot water quick closing valves.

o. All piping systems must be tested before concealing or insulating.

PIPING

a. Supply pipe and fittings of approved nationally recognized manufacturer, fabrication to the referenced standards (inclusive of fittings and joints, as hereinafter stated).

1. Hub and Spigot Cast-Iron Soil Pipe: Sound, cylindrical smooth gray iron, free from cracks, sand holes, or other defects of uniform thickness and of grade known as (Class A) conforming to ASTM A74-05.

2. Hubless Cast-Iron Soil Pipe: Sound, cylindrical smooth gray iron, free from cracks, sand holes, or other defects of uniform thickness conforming to ASTM Å888-05, CISPI 301-05.

3. Steel Pipe: Standard weight steel pipe conforming to ASTM A-120, Schedule 40, as manufactured by Jones and Laughlin Steel Co., Youngstown Sheet & Tube Co., or approved equal. Galvanized or black as hereinafter specified, conforming to ASTM A53/A53M-04a, ASME B36.1M-2004.

4. Copper Water Tube (Above Grade): Type "L" hard drawn copper tubing as hereinafter specified, containing not less than 99.9% copper, good for 250 lbs. working pressure, as manufactured by Anaconda, Mueller Brass, Revere Copper & Brass or approved equal, conforming to ASTM-B88-03.

5. Copper Water Tube (Below Grade): Type "K" hard drawn copper tubing as hereinafter specified, containing not less than 99.9% copper, good for 250 lbs. working pressure, as manufactured by Anaconda, Mueller Brass, Revere Copper & Brass or approved equal, conforming to ASTM-B88-03.

6. Copper Drainage Tube: Type "DWV" hard drawn copper tubing as hereinafter specified, As manufactured by Anaconda, Mueller Brass, Revere Copper & Brass or approved equal, conforming to ASTM-B306-02.

FITTINGS

a. All fittings shall be Crane, Walworth, Grinnell, or approved equal, of weights, materials, and finish corresponding to those of pipe specified hereinbefore.

b. All fittings for cast iron piping, of weight, class and service corresponding to that of pipe specified hereinbefore.

c. All fittings for steel pipe where used for drainage piping shall be cast iron threaded recessed drainage fittings conforming to ASME B16.12-1998, with interior shoulders of same diameter as the pipe. Drainage fittings, long radius pattern where conditions permit. On galvanized piping use galvanized fittings.

d. All fittings for steel pipe where used for vent piping, shall be galvanized screwed malleable iron fittings, conforming to ASME B16.3-1998.

e. All fittings for copper tubing, wrought copper with solder end joints conforming to ASME B16.22-2001, suitable for water working pressure up to 250 psi as manufactured by Anaconda, Mueller Brass, Chase Brass, Revere Copper & Brass, Nibco, or approved equal.

VALVES

a. Provide all valves shown on plans, in all branches from mains to groups of fixtures, and wherever required for easy and efficient control of hot and cold water systems.

b. Manufacturers: Jenkins, Nibco-Scott, Apollo, Hammond, Kennedy, or Walworth.

HANGERS AND SUPPORTS

a. Provide approved type hangers and supports arranged to maintain required grading and pitching of lines to prevent vibration and to provide for expansion and contraction.
b. Secure all hanger rods to approved type beam clamps, expansion bolts or angle clips; provided with suitable inserts as required and approved as follows:

i. Copper Water Piping: Hangers for piping 1¼" and smaller - 8'-0" on centers.
2. Steel Pipe: Provide heavy malleable or wrought iron hangers at 10'-0" intervals for support of all horizontal suspended steel pipes.

c. On all horizontal runs of cast iron not laid in trenches, provide at least one (1) support located directly in back of hub for each section of pipe and fittings.

d. Use heavy wrought iron clamps for support of all vertical pipe at proper intervals and as directed by the Owner.

e. On hangers for water piping, provide 6 lb. sheet lead hanger inserts to isolate all copper from hangers and rods, or copper plated steel hangers.

f. Where insulated piping occurs provide hangers of proper size to accommodate insulation. Provide No. 14 gauge steel saddle inserts shaped to diameter same as insulation.

g. Provide additional miscellaneous steel for support of all piping from building framing.

h. All hangers manufactured by Grinnell Co., Fee & Mason Auto Grip or approved equal.

ESCUTCHEONS AND SLEEVES

a. Properly protect all piping passing through floors, walls, etc., by suitable sleeves extending from finished surface to finished surface, including any furring.

b. Secure sleeves firmly in place during pouring and protect against collapsing.

c. Fill all spaces between pipe and sleeves as required.

d. Space between pipe and sleeves through foundation walls shall be caulked watertight.

e. Provide Ritter No. 36A escutcheons with chrome plated finish wherever pipes pass through floors, ceilings, walls, and partitions.

SOLDERED JOINTS IN COPPER PIPE

a. Install all copper piping in strict accordance with manufacturer's instructions and specifications, using approved solder and soldering fluxes. Solder - 95% tin and 5% antimony (no lead).

JOINTS IN STEEL PIPE

a. Caulk connecting joints between steel pipe and cast iron pipe as hereinafter described for cast iron pipe. Fit end of steel pipe with ring or part of coupling screwed on to form spigot.

b. Pack flanged joints with Garlock or approved equal; sheet ring gaskets not less than ⅛" thick.

c. Make up all threaded joints with graphite and oil or approved type joint cement applied to male threads only.

JOINTS IN CAST IRON PIPE

a. Cast Iron Hub and Spigot: Pack joints in cast iron soil pipe with oakum or hemp, fill with molten lead not less than 1" deep and not to extend more than ⅛" below the rim of the hub. Lead shall be run in one pouring and shall be caulked tight.

b. Cast Iron Hubless: Joints may be made by the use of elastometric sealing sleeve and corrosion resisting clamping device.

CONNECTIONS BETWEEN DISSIMILAR METALS

a. Avoid connections between pipe, fittings, hangers, and equipment of dissimilar metals, wherever practical. Where insulation connections are designated or required, insulate against direct contact using approved di-electric fittings, as made by Epco Sales Co., or approved equal.

MATERIALS AND EQUIPMENT

a. Unless otherwise specified, all materials furnished under this specification must conform to applicable specifications of the American Society of Testing Materials, latest revision new and free from rust, flaws, and other defects.

b. Equipment shall be of manufacturer as hereinafter specified.

SANITARY, WASTE AND VENT SYSTEM

a. Install a complete system of waste, and vent piping for all plumbing fixtures and drains as indicated on drawings.

b. Make all offsets in piping with ⅛ bends, Y's may be used on vertical waste, and vent lines.

c. Pitch all waste lines up to and including 3" in size at ¼" per foot, 4" and above shall be pitched at ⅛" per foot, unless otherwise noted.

d. piping shall be standard weight cast iron for sizes 3" and larger, use type "DWV" copper for 2½" and smaller. Fittings for waste lines shall be wrought copper recessed "DWV" drainage type, vent lines shall be the same. Copper piping is not be permitted for urinal waste piping.

CLEANOUTS

a. Provide cleanouts as shown on drawings or necessary and at base of all stacks for all drains, wastes, at ends, changes of direction and intermediate points of run.

b. Equip each trap with at least one cleanout opening with brass screw plug so placed that interior of trap can be easily accessible for cleaning.

c. Make all cleanouts accessible and extend to finished floors, walls, or grade as required.

COLD WATER DISTRIBUTION SYSTEM

a. Extend new cold water piping from existing, all as shown on drawings, and extend to all plumbing fixtures and other equipment requiring cold water, substantially as indicated, specified or required.

b. All interior cold water piping shall be Type "L" hard drawn copper tubing with soldered joints and necessary valves and fittings.

HOT WATER DISTRIBUTION SYSTEM

a. From new water heater, extend complete system of hot water mains and branches to furnish hot water to all fixtures and equipment requiring same as indicated.

b. Hot water piping shall not be run closer then 6" from any adjacent cold water piping, without prior approval of the Engineer.

c. Hot water piping shal be type "L" copper tubing as hereinbefore specified for cold water piping.

d. Furnish and install all valves, safety reliefs, specialties, etc., as indicated, specified, or required for domestic hot water systems. Stops, all strainers, unions, isolators, etc. as specified for cold water system.

INSULATION

a. All insulation shall have composite (insulation jacket or facing and adhesive) fire and smoke hazard ratings as tested by procedure ASTM E-84, NFPA 255, and UL T25, not exceeding:

Flame Spread	25
Smoke Developed	50
Fuel Contributed	50

b. Accessories such as adhesives, mastics, cements, tapes, and cloths for fittings shall have component ratings as listed above. All products shall bear UL labels indicating the above are not exceeded.

c. Shall be as manufactured by Owens-Corning, Certain-Teed, or Johns Manville, applied according to the best practices of the trade and to meet the approval of the Engineer.

d. All cold water piping shall be insulated with 1" thick fiber glass 25 ASJ pipe insulation with factory applied white vapor barrier jacket. All seams and laps shall be sealed with Foster 81-19. Staples may be used to aid fastening but must be brushed over with Foster 31-69.

e. All fittings shall be insulated and covered with Zeston pre-molded one piece PVC fitting covers. Insulation thickness shall be same size as adjacent piping.

f. All domestic hot water piping shall be insulated with 1" thick fiber glass 25 ASJ pipe insulation. Finish and fittings shall be as specified for cold water.

PAINTING

a. The Plumbing Contractor shall paint all iron supports, hangers, etc., in concealed spaces with one coat of rust-resistant paint, after installation.

b. All machinery such as pumps, meters, appliances, etc., shall be provided with machinery enameled finish at the factory. After installation clean, rub down, and touch up with matching color enamel.

c. All other painting shall be done by General Contractor, however, Plumbing Contractor shall thoroughly clean all work free of grease, mortar, plaster, and dirt, and leave in satisfactory condition for painting by others.

TESTS AND INSPECTIONS

a. The Plumbing Contractor shall, at his own expense during the progress of the work or upon its completion, make such tests of his work as herein specified or as are required by the Owner, Engineer or by the requirements of all authorities having jurisdiction and under their supervision.

b. The Plumbing Contractor must provide all apparatus temporary piping connections or any other requirements necessary for such tests. He shall take all due precautions to prevent damage to the building or its contents incurred by such tests as he will be required and make good at his expense any damage so caused.

c. Any leaks, defects, or deficiencies discovered as a result of the tests shall be immediately repaired or made good and the tests shall be repeated until the test requirements are fully complied with. No caulking of pipe joints to remedy leaks will be permitted except where lead and oakum joints are used.

d. The drainage piping throughout shall be tested upon completion of the rough work; all openings shall be tightly closed by screw plugs or equivalent device and the system shall be subject to an approved hydrostatic test by filling with water as directed. All joints shall be again tested and proven tight.

e. All hot and cold water piping shall be tested to a hydrostatic pressure of 150 lbs. per square inch, pressure shall be maintained without pumping for a four hour period or as directed by Engineer.

CLEANING UP

a. Contractor shall, during the time he is engaged on contract work, keep everything used in conjunction therewith in an orderly and clean condition and shall periodically during the progress of the work or when directed by the Engineer to do so, clean up and remove all rubbish accumulated from his work from the building at his own expense.

RECORD DRAWINGS

a. During construction, Contractor shall keep an accurate record of all deviations between work as shown on the drawings and that which is actually installed. The cost of furnishing prints and preparing record drawings showing all deviations shall be borne by this Contractor and shall be included in his bid.

b. Preparation of record drawings shall be carried on as the work progresses and be available for inspection by the Engineer.

c. When all revisions showing work as finally installed are made, prints shall be submitted for review to the Engineer and upon approval, two sets shall be delivered to Owner.

PIPE IDENTIFICATION

a. Identification bands approximately 2" wide, spaced 10'-0" on centers shall be provided around each run of exposed piping (covered or uncovered) located in Equipment Rooms and elsewhere exposed, and above accessible ceilings.

MAINTENANCE INSTRUCTIONS

a. This Contractor shall provide instructions on the operation of Plumbing Systems in all details, to representatives of the Owner, who will be operating and maintaining systems.

b. Notify Owner in advance, when all arrangements have been made for time when instructions are to be given.

GUARANTEE

a. Furnish guarantees for all labor and material for one (1) year from date of final acceptance of Contract. Include agreement to repair and make good at own expense any and all defects in work or material appearing during that time, which in Engineer's opinion arise from defective workmanship, imperfect, or inferior materials.

b. The manufacturers of all equipment to be supplied under this Contract by the Plumbing Contractor shall warrant the same against all costs, including labor and materials, arising out of defects in material and/or workmanship, for a period coextensive with the guarantee period provided in the Contract Documents.

studio 1200, LLC
511 MILLBURN AVENUE
SHORT HILLS, NJ 07078
973.376.5111
973.376.5011
www.studio1200.com
CERITFICATE OF AUTHORIZATION # AC-710

Nancy Dougherty, AIA, LEED
NJ-AI 14861/NY-025099/CT-ARI.0011798

MEP CONSULTANT:
Roxbury Engineering Associates, L.L.C.
3 Gold Mine Road
Flanders, NJ 07836
Phone: (973) 252-6973
Fax: (973) 252-7028
COA: 24GA28096600
Rick Macieko, PE
NJ PE: 37111 USVI PE: 0-4263-1B
NY PE: 087618 MD PE: 50005
PA PE: 07771177 CT PE: 32573

REA PROJECT NO. 18-1451

STATE OF NEW JERSEY RICHARD MACIEKO No. GE37111 PROFESSIONAL ENGINEER

NO	ISSUE	DATE
1	ISSUED FOR BID & PERMIT	10/24/18
2	NJSEA PERMIT REVIEW	12/4/18
3	REVISED PER NJSEA COMMENTS	01/02/19
4	REVISED PER DUST COLLECTION RECEP. & MILL AREA EXHAUST	01/24/19
5	REVISED PER NJSEA COMMENTS	02/07/19
6	CONTRACT CONFORMANCE SET	02/20/19

BOLERO SNORT BREWERY
316 20TH STREET
CARLSTADT, NJ

PLUMBING SPECIFICATIONS

P5.0

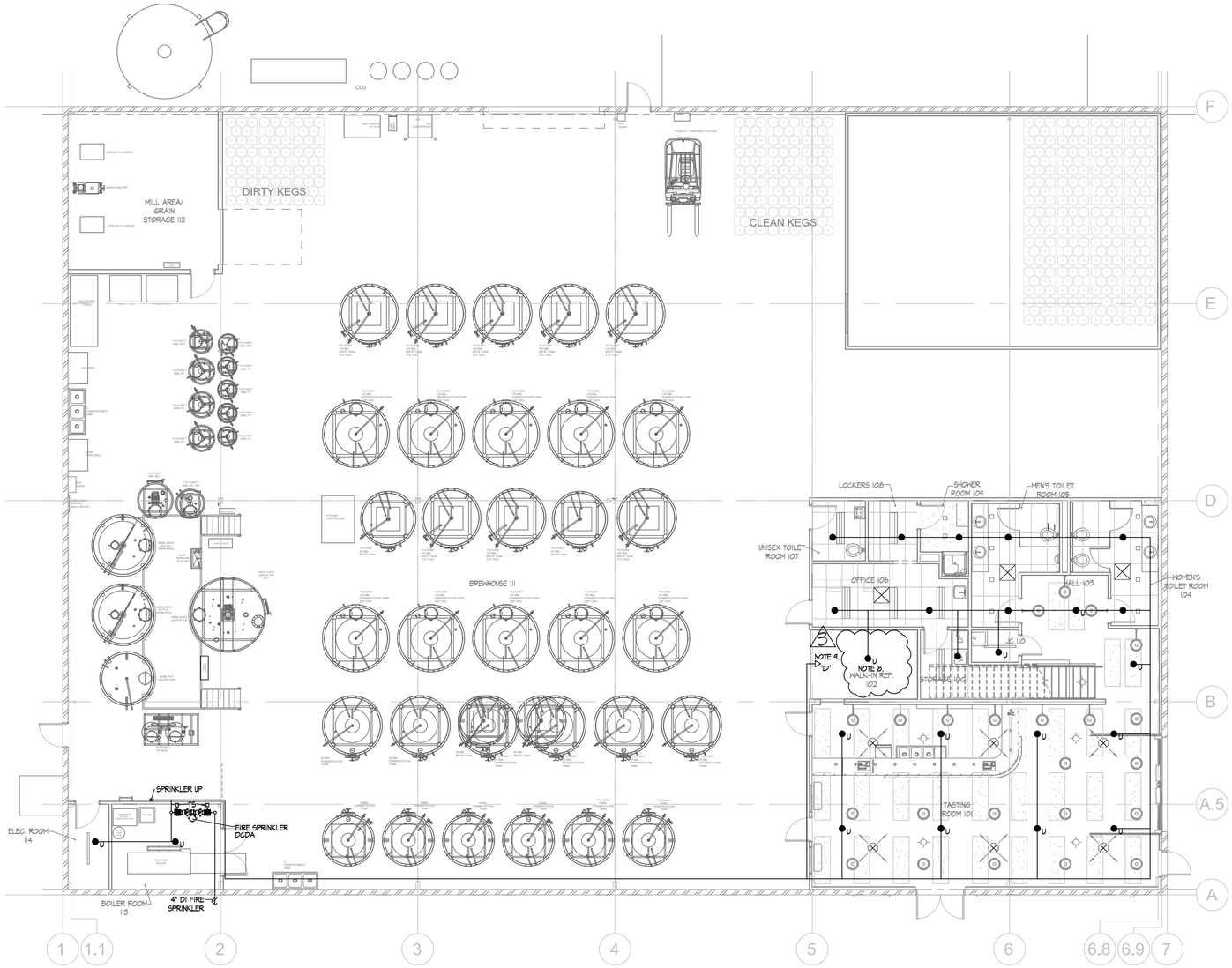

MAIN LEVEL SPRINKLER NEW WORK PLAN
SCALE: 1/8"=1'-0"

SPRINKLER DESIGN NOTE:

THE SPRINKLER DESIGN PROVIDED IS A BASIS OF DESIGN WITH A PROPOSED HEAD PLACEMENT LAYOUT ONLY. THE SPRINKLER CONTRACTOR WILL BE RESPONSIBLE FOR OBTAINING WATER FLOW TEST DATA, PIPING LAYOUT, SHOP DRAWINGS, EQUIPMENT CUT SHEETS AND FINAL HYDRAULIC CALCULATIONS BY A LICENSED NEW JERSEY PROFESSIONAL ENGINEER AND SUBMITTING TO AHJ FOR APPROVAL PRIOR TO BEGINNING ANY WORK.

SPRINKLER NOTES:

1. THE SPRINKLER CONTRACTOR IS REQUIRED TO COORDINATE ALL SPRINKLER PIPING WITH THE MECHANICAL, ELECTRICAL AND PLUMBING CONTRACTORS PRIOR TO BEGINNING ANY WORK.
2. ALL SPRINKLER WORK SHALL BE DONE IN ACCORDANCE WITH THE 2015 NFPA 13 SPRINKLER CODE AND THE 2015 INTERNATIONAL BUILDING CODE (NJ EDITION).
3. COORDINATE FINAL LOCATION OF SIAMESE CONNECTION WITH FIRE DEPARTMENT.
4. SPRINKLER CONTRACTOR SHALL PROVIDE ADDITIONAL HEADS AS REQUIRED DUE TO SOFFITS, OBSTRUCTIONS OR MECHANICAL EQUIPMENT AS REQUIRED BY NFPA 13.
5. PROVIDE WATERFLOW VALVE WITH TAMPER SWITCH.
6. PROVIDE LOW POINT DRAINS ON ALL PIPING AS REQUIRED BY NFPA 13.
7. PROVIDE UPRIGHT SPRINKLER HEAD ABOVE WALK-IN COOLER.
8. PROVIDE DRY SIDEWALL SPRINKLER HEAD IN WALK-IN.

SPRINKLER LEGEND	
SYMBOL	DESCRIPTION
●	NEW PENDANT SPRINKLER
●U	NEW UPRIGHT SPRINKLER
▷	NEW SIDEWALL SPRINKLER
▷D'	NEW SIDEWALL DRY SPRINKLER
———	SPRINKLER PIPING (SP)
———	STAND PIPE PIPING (STP)
⊗	DENOTES TIE-IN POINT
—○	SPRINKLER LINE UP
—)	SPRINKLER LINE DOWN
—·—·—	SPRINKLER DRAIN
	SWING CHECK VALVE
	DRY CONTROL VALVE
FDC	FIRE DEPARTMENT CONNECTION
FCV	FLOOR CONTROL VALVE
RCV	RISER CONTROL VALVE
FHV	FIRE HOSE VALVE
TS	TAMPER SWITCH

studio 1200, LLC
511 MILLBURN AVENUE
SHORT HILLS, NJ 07078
973.376.5111
973.376.5011
www.studio1200.com
CERITFICATE OF AUTHORIZATION # AC-710

Nancy Dougherty, AIA, LEED
NJ-AI 14861/NY-025099/CT-ARI.0011798

MEP CONSULTANT:
Roxbury Engineering Associates, L.L.C.
3 Gold Mine Road
Flanders, NJ 07836
Phone: (973) 252-6973
Fax: (973) 252-7028
COA: 24GA28096600
Rick Macieko, PE
NJ PE: 37111 USVI PE: 0-4263-1B
NY PE: 087618 MD PE: 50005
PA PE: 07771177 CT PE: 32573

REA PROJECT NO. 18-1451

NO	ISSUE	DATE
1	ISSUED FOR BID & PERMIT	10/24/18
2	NJSEA PERMIT REVIEW	12/4/18
3	REVISED PER NJSEA COMMENTS	01/02/19
4	REVISED PER DUST COLLECTION RECEP. & MILL AREA EXHAUST	01/24/19
5	REVISED PER NJSEA COMMENTS	02/07/19
6	CONTRACT CONFORMANCE SET	02/20/19

BOLERO SNORT BREWERY
316 20TH STREET
CARLSTADT, NJ

MAIN LEVEL
SPRINKLER NEW WORK
PLAN

SP1.0

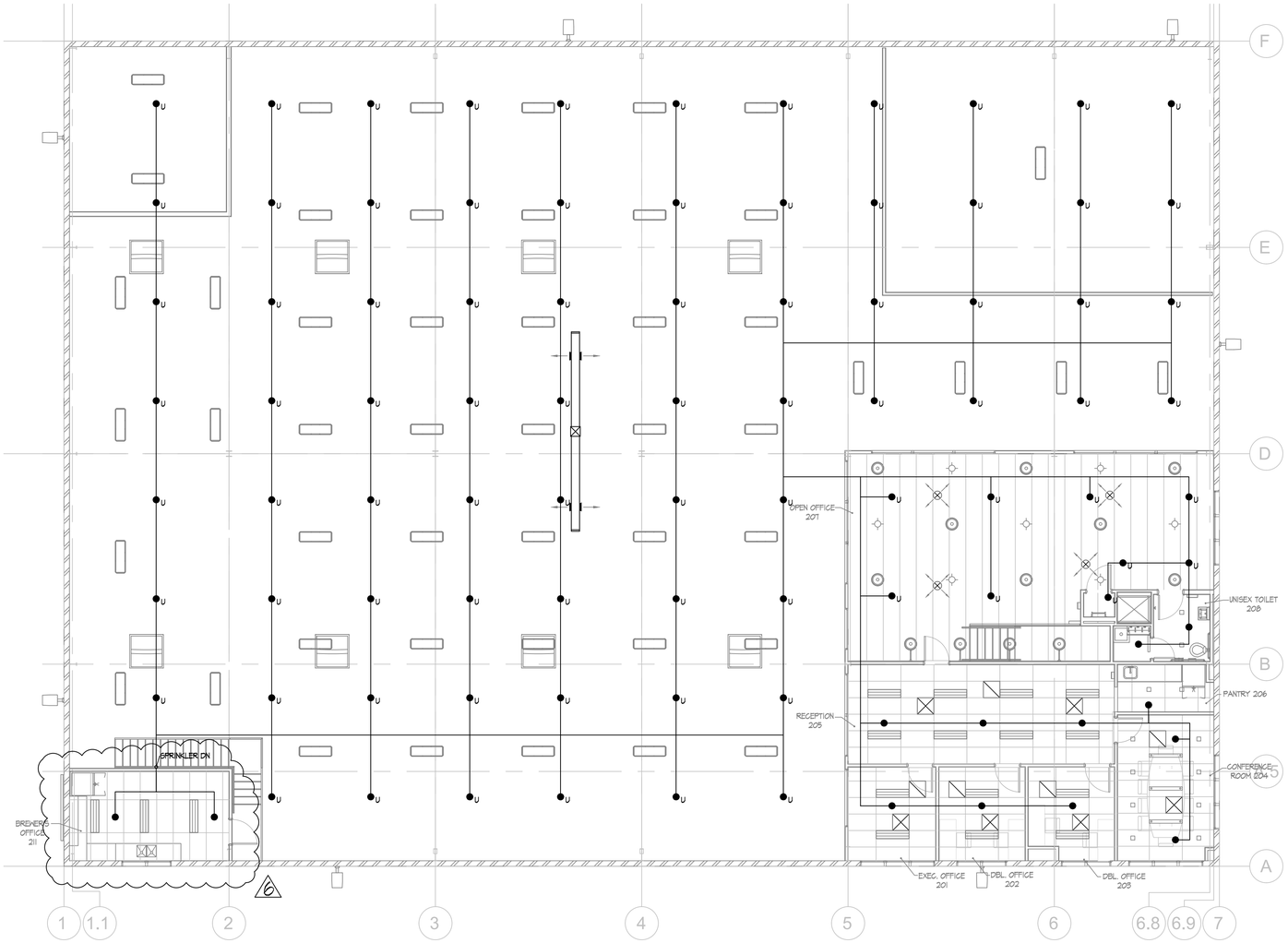

UPPER LEVEL SPRINKLER NEW WORK PLAN
SCALE: 1/8"=1'-0"

SPRINKLER DESIGN NOTE:

THE SPRINKLER DESIGN PROVIDED IS A BASIS OF DESIGN WITH A PROPOSED HEAD PLACEMENT LAYOUT ONLY. THE SPRINKLER CONTRACTOR WILL BE RESPONSIBLE FOR OBTAINING WATER FLOW TEST DATA, PIPING LAYOUT, SHOP DRAWINGS, EQUIPMENT CUT SHEETS AND FINAL HYDRAULIC CALCULATIONS BY A LICENSED NEW JERSEY PROFESSIONAL ENGINEER AND SUBMITTING TO AHJ FOR APPROVAL PRIOR TO BEGINNING ANY WORK.

SPRINKLER NOTES:

1. THE SPRINKLER CONTRACTOR IS REQUIRED TO COORDINATE ALL SPRINKLER PIPING WITH THE MECHANICAL, ELECTRICAL AND PLUMBING CONTRACTORS PRIOR TO BEGINNING ANY WORK.
2. ALL SPRINKLER WORK SHALL BE DONE IN ACCORDANCE WITH THE 2013 NFPA 13 SPRINKLER CODE AND THE 2015 INTERNATIONAL BUILDING CODE (NJ EDITION).
3. COORDINATE FINAL LOCATION OF SIAMESE CONNECTION WITH FIRE DEPARTMENT.
4. SPRINKLER CONTRACTOR SHALL PROVIDE ADDITIONAL HEADS AS REQUIRED DUE TO SOFFITS, OBSTRUCTIONS OR MECHANICAL EQUIPMENT AS REQUIRED BY NFPA 13.
5. PROVIDE WATERFLOW VALVE WITH TAMPER SWITCH.
6. PROVIDE LOW POINT DRAINS ON ALL PIPING AS REQUIRED BY NFPA 13.
7. PROVIDE UPRIGHT SPRINKLER HEAD ABOVE WALK-IN COOLER.
8. PROVIDE DRY SIDEWALL SPRINKLER HEAD IN WALK-IN.

SPRINKLER LEGEND

SYMBOL	DESCRIPTION
●	NEW PENDANT SPRINKLER
●U	NEW UPRIGHT SPRINKLER
▷	NEW SIDEWALL SPRINKLER
▷D	NEW SIDEWALL DRY SPRINKLER
———	SPRINKLER PIPING (SP)
———	STAND PIPE PIPING (STP)
	DENOTES TIE-IN POINT
—○	SPRINKLER LINE UP
—)	SPRINKLER LINE DOWN
-·-·-·-	SPRINKLER DRAIN
	SWING CHECK VALVE
D	DRY CONTROL VALVE
FDC	FIRE DEPARTMENT CONNECTION
FCV	FLOOR CONTROL VALVE
RCV	RISER CONTROL VALVE
FHV	FIRE HOSE VALVE
TS	TAMPER SWITCH

studio 1200, LLC
511 MILLBURN AVENUE
SHORT HILLS, NJ 07078
973.376.5111
973.376.5011
www.studio1200.com
CERITFICATE OF AUTHORIZATION # AC-710

Nancy Dougherty, AIA, LEED
NJ-AI 14861/NY-025099/CT-ARI.0011798

MEP CONSULTANT:
Roxbury Engineering Associates, L.L.C.
3 Gold Mine Road
Flanders, NJ 07836
Phone: (973) 252-6973
Fax: (973) 252-7028
COA: 24GA28096600
Rick Macieko, PE
NJ PE: 37111 USVI PE: 0-4263-1B
NY PE: 087618 MD PE: 50005
PA PE: 0777177 CT PE: 32573

REA PROJECT NO. 18-1451

STATE OF NEW JERSEY RICHARD MACIEKO No. GE37111 PROFESSIONAL ENGINEER

NO	ISSUE	DATE
1	ISSUED FOR BID & PERMIT	10/24/18
2	NJSEA PERMIT REVIEW	12/4/18
3	REVISED PER NJSEA COMMENTS	01/02/19
4	REVISED PER DUST COLLECTION RECEP. & MILL AREA EXHAUST	01/24/19
5	REVISED PER NJSEA COMMENTS	02/07/19
6	CONTRACT CONFORMANCE SET	02/20/19

BOLERO SNORT BREWERY
316 20TH STREET
CARLSTADT, NJ

UPPER LEVEL SPRINKLER NEW WORK PLAN

SP1.1

RISER CHECK SYMBOL LEGEND

1 - FLANGE TEE
2 - 06 & 1" VALVE WITH TAMPER SWITCH
3 - AMES 500055 BACKFLOW PREVENTER
4 - GROOVED BUTTERFLY VALVE WITH TAMPER
5 - SHOTGUN RISER CHECK VALVE
6 - WATER FLOW SUPERVISORY SWITCH
7 - DRY SYSTEM FEED
8 - 4" SWING CHECK W/ BALL DRIP
9 - FIRE DEPARTMENT CONNECTION
10- GROOVED BUTTERFLY VALVE WITH TAMPER
11- POTTER PS40-2A PRESSURE SWITCH
12- AIR MAINTENANCE DEVICE
13- RISER MOUNT AIR COMPRESSOR
14- POTTER PSIO-2A PRESSURE SWITCH
15- CENTRAL MODEL AG DRY VALVE WITH TRIM
16- RISER STAND
17- TO NET SPRINKLER SYSTEM

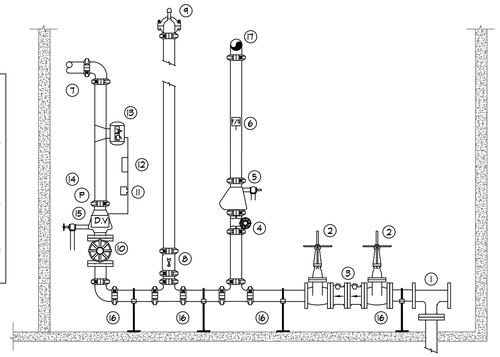

1 RISER CHECK DETECTOR ASSEMBLY
NTS

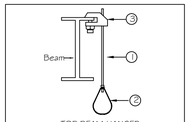

1		
1	ATR	1
2	SWIVEL RING	1
3	J.TOP BEAM CLAMP	1
4	NIL	O
5	NIL	O

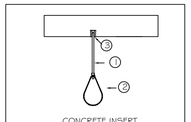

3		
1	ATR	1
2	SWIVEL RING	1
3	CONC. SHIELD	1
4	NIL	O
5	NIL	0

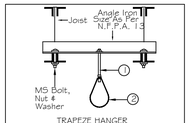

9		
1	ATR	1
2	SWIVEL RING	1
3	M5 BOLT	2
4	NUT & WASHER SET	2
5	ANGLE IRON	1

PIPE SIZE	MAX. HANGER SUPPORT SPACING (ft) SCH 40
1"	12'-0"
1-1/4"	12'-0"
1-1/2"	15'-0"
2"	15'-0"
2-1/2"	15'-0"
3"	15'-0"
4"	15'-0"

2 SPRINKLER HANGING DETAIL
NTS

NOTE: WHERE PIPING IS EXPOSED AT FINISH WALLS, FLUSH MOUNT SLEEVE AND PROVIDE ESCUTCHEON PLATE.

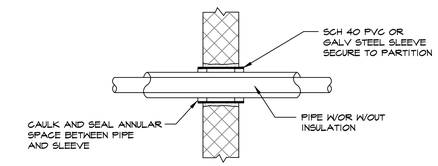

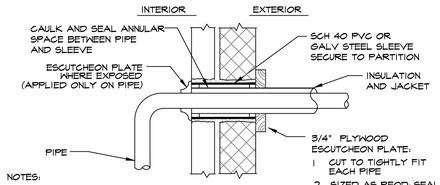

NOTES:
1 TYP FOR NON-INSULATED PIPE AND CONDUIT
2 TYP FOR MASONRY OR CONCRETE WALL
3 FIRE RATED WALLS MUST BE SEALED W/ APPROPRIATE FIRE RETARDED CAULKING
4 ESCUTCHEONS ARE MADE TO FIT PIPE ONLY

3 PIPE PENETRATION THRU WALLS
NTS

INSTALLATION REQUIREMENTS:

1. ALL SPRINKLER WORK TO BE IN ACCORDANCE WITH, BUT NOT LIMITED TO THE FOLLOWING CODES AND STANDARDS: 2015 INTERNATIONAL BUILDING CODE, 2013 NFPA 13, INSTALLATION OF SPRINKLER SYSTEMS 2013 NFPA 24, INSTALLATION OF PRIVATE SERVICE MAINS AND THEIR APPURTENANCES.
2. ALL SPRINKLER PIPING 2" AND UNDER OR HAVING CUT THREADS OR GROOVES SHALL BE SCHEDULE 40 BLACK STEEL CONFORMING TO ASTM A 795.
3. SPRINKLER PIPING LARGER THAN 2" MAY BE SCHEDULE 10 CONFORMING TO ASTM A 795 WHEN JOINED USING ROLL-GROOVED JOINTS AND FITTINGS.
4. ALL SCREWED FITTINGS SHALL BE CAST IRON CONFORMING TO ASME B16.4 OR MALLEABLE IRON CONFORMING TO ASME B16.3.
5. ALL SPRINKLER HEADS TO BE VIKING OR EQUIVALENT OF MODEL AND TYPE SPECIFIED FOR THE PARTICULAR AREA.
6. ALL SPRINKLER HEADS SHALL HAVE AN ORDINARY TEMPERATURE RATING UNLESS OTHERWISE SPECIFIED.
7. INSTALL PIPING TO FACILITATE DRAINING OF SYSTEM. CONTRACTOR RESPONSIBLE FOR INSTALLING ALL DRAIN VALVES, CAPPED NIPPLES, ETC. AS REQUIRED.
8. CONTRACTOR TO INSTALL SPRINKLER HEADS IN CENTER OF TILE WHEREVER POSSIBLE.
9. FLANGES SHALL CONFORM TO NFPA 13 AND ASME B16.1. GASKETS SHALL BE NON-ASBESTOS COMPRESSED MATERIAL IN ACCORDANCE WITH ASME B16.21, 1/16" THICK, AND FULL FACE OR SELF-CENTERING FLAT RING TYPE. BOLTS SHALL BE SQUAREHEAD CONFORMING TO ASME B18.2.1 AND NUTS SHALL BE HEXAGON TYPE CONFORMING TO ASME B18.2.2.
10. PIPE HANGERS SHALL BE UL FIRE LISTED OR FM P7825A AND FM 7825B AND OF THE TYPE SUITABLE FOR THE APPLICATION, CONSTRUCTION AND PIPE TYPE AND SIZE TO BE SUPPORTED.
11. ALL MANUALLY OPERATED CONTROL VALVES SHALL BE (OS&Y) TYPE AND BE UL LISTED OR FM P7825A AND FM7825B APPROVED.
12. ALL CHECK VALVES SHALL BE UL LISTED OR FM P7825A AND FM P7825B APPROVED. CHECK VALVES 4" AND LARGER SHALL BE OF THE SWING TYPE WITH FLANGED CAST IRON BODY AND FLANGED INSPECTION PLATE.
13. ALL TAMPER SWITCHES, AND WATERFLOW ALARMS SHALL BE PROVIDED BY SPRINKLER CONTRACTOR AND WIRED BY ELECTRICAL/FIRE ALARM CONTRACTOR.
14. PROVIDE VALVE IDENTIFICATION SIGNS OF MINIMUM SIZE 6" WIDE AND 2" HIGH WITH ENAMEL BAKED FINISH ON MIMIMUM 18GA STEEL OR .024" ALUMINUM. SIGN SHALL HAVE WHITE LETTERS ON RED BACKGROUND AND SHALL HAVE WORDING THAT IDENTIFIES THE OPERATIONAL COMPONENTS.
15. PROVIDE (6) SPARE SPRINKLER HEADS FOR EACH TYPE USED ALONG WITH (1) SPARE WRENCH IN SPRINKLER CABINET LOCATED IN VICINITY OF SPRINKLER MAIN WATER SUPPLY ON THE BASEMENT LEVEL.
16. THE CONTRACTOR SHALL PERFORM AND MEET ALL CODE REQUIRED TESTS AND PROVIDE CERTIFIED DOCUMENTATION AS TO THE RESULTS. PROVIDE CONTRACTOR'S MATERIAL AND TESTING CERTIFICATE FOR ABOVEGROUND AND UNDERGROUND PIPING IN ACCORDANCE WITH NFPA 13.
17. CONTRACTOR TO PROVIDE (1) YEAR GUARANTEE ON ALL LABOR AND MATERIAL EFFECTIVE THE DAY THE CERTIFICATE OF COMPLIANCE IS OBTAINED FROM THE LOCAL BUILDING DEPARTMENT.
18. PROVIDE SEISMIC SWAY BRACING AT ALL FEED AND CROSS MAINS AND ALL BRANCH SPRINKLER LINES 2-1/2"Ø AND LARGER.

SWAYBRACE SPACING FOR LATERALS AND LONGITUDINALS SHALL BE 40' AND 80' RESPECTIVELY FOR ALL NEW MAIN PIPING.

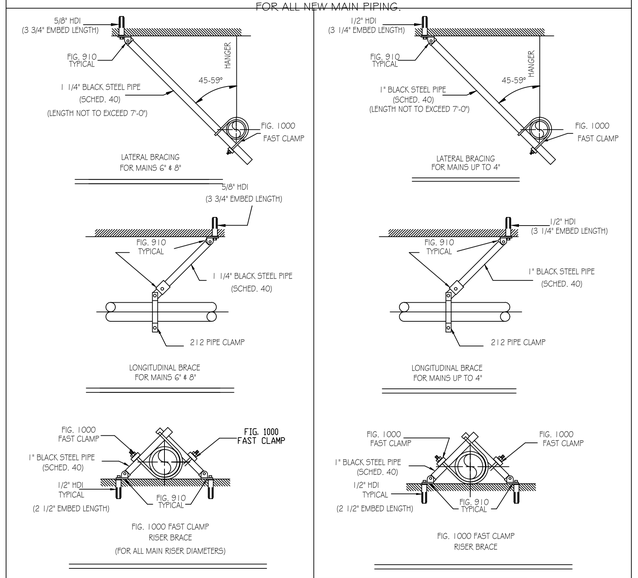

EARTHQUAKE SWAYBRACE DETAILS AND COMPONENTS

SWAYBRACE LOAD CALCULATIONS

PIPE SIZE	BRACE SIZE	BRACE SPACING LAT	BRACE SPACING LONG	ASSIGNED LOAD (lbs.) MULTIPLYING FACTOR .8	NFPA #13 TABLE 4-6.4.3.5.3 BRACE TYPE	ATTACHMENT TYPE W/ MAX LOAD VALUE (lbs.)
8"	1 1/4" SCH.40	30'	60'	2196	TYPE 'B'	5/8" BOLT = 2857
6"	1 1/4" SCH.40	40'	80'	2088	TYPE 'B'	5/8" BOLT = 2857
4"	1" SCH.40	40'	80'	1392	TYPE 'B'	1/2" BOLT = 1782
3"	1" SCH.40	40'	80'	1304	TYPE 'B'	1/2" BOLT = 1782
2 1/2"	1" SCH.40	40'	80'	1256	TYPE 'B'	1/2" BOLT = 1782

4 SPRINKLER PIPING SEISMIC BRACING DETAIL
NTS

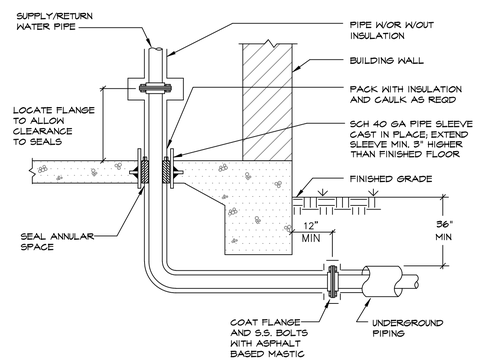

5 PIPE PENETRATION THRU CONCRETE FLOOR
NTS

NOTE:
CORE DRILL EXISTING FLOOR AND SLEEVE TO FIT SIZE

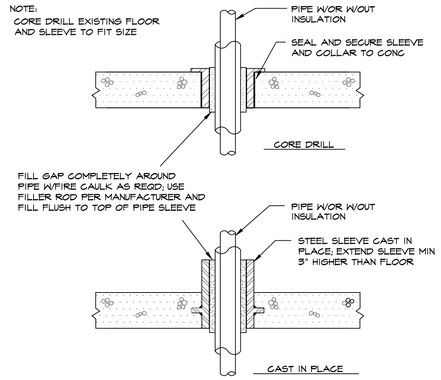

6 PIPE PENETRATION THRU CONCRETE
NTS

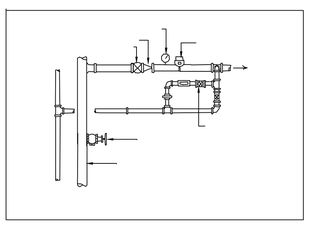

7 FLOOR CONTROL VALVE ASSEMBLY
NTS

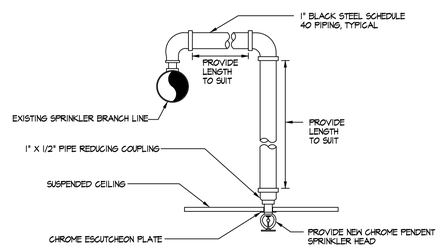

NOTES:
1. ADJUST SPRINKLER DROPS AS NECESSARY TO CLEAR OBSTRUCTIONS SUCH AS THE CEILING "T" BAR SUSPENSION SYSTEM, LIGHT FIXTURES, ETC. PROVIDE A PIPE HANGER IF THE HORIZONTAL OFFSET LENGTH EXCEEDS 24 INCHES.
2. THIS SPRINKLER HEAD DROP IS APPLICABLE ONLY WHERE IT IS NOT NECESSARY TO RETAIN AN UPRIGHT SPRINKLER FOR PROTECTION OF COMBUSTIBLE CONSTRUCTION ABOVE THE CEILING.

8 NEW SPRINKLER HEAD DROP
NTS

studio 1200, LLC
511 MILLBURN AVENUE
SHORT HILLS, NJ 07078
973.376.5111
973.376.5011
www.studio1200.com
CERITFICATE OF AUTHORIZATION # AC-710

Nancy Dougherty, AIA, LEED
NJ-AI 14861/NY-025099/CT-ARI.0011798

MEP CONSULTANT:
Roxbury Engineering Associates, L.L.C.
3 Gold Mine Road
Flanders, NJ 07836
Phone: (973) 252-6973
Fax: (973) 252-7028
COA: 24GA28096600
Rick Macieko, PE
NJ PE: 37111 USVI PE: 0-4263-1B
NY PE: 087618 MD PE: 50005
PA PE: 0777177 CT PE: 32573

REA PROJECT NO. 18-1451

NO	ISSUE	DATE
1	ISSUED FOR BID & PERMIT	10/24/18
2	NJSEA PERMIT REVIEW	12/4/18
3	REVISED PER NJSEA COMMENTS	01/02/19
4	REVISED PER DUST COLLECTION RECEP. & MILL AREA EXHAUST	01/24/19
5	REVISED PER NJSEA COMMENTS	02/07/19
6	CONTRACT CONFORMANCE SET	02/20/19

BOLERO SNORT BREWERY
316 20TH STREET
CARLSTADT, NJ

SPRINKLER DETAILS

SP2.0

FIRE PROTECTION SPECIFICATIONS

01. GENERAL REQUIREMENTS

a. Work of this Section shall conform to all requirements of the Contract Documents. The Instruction to Bidders, General Conditions, Supplemental General Conditions, and all applicable portions of Specification shall be considered part of this Section.

b. The Contractor shall visit the existing building and site and thoroughly familiarize himself with the existing conditions. No extra compensation will be allowed for additional work claimed, if such work could have been anticipated after careful examination of existing conditions.

02. SCOPE OF WORK

a. The work covered by this Section of the Specifications shall include the furnishing of all labor, equipment, appliances, materials, and the performing of all operations in connection with FIRE PROTECTION, complete, in strict accordance with this Section of the Specifications and the applicable Drawings, in general, including the following:

1. Removal of existing piping, heads, hangers, etc. as shown on drawings.
2. Pipe, fittings, clamps, hangers, supports, etc.
3. Valves and test connections as shown or required.
4. Complete revised wet pipe sprinkler system throughout existing building all as shown or required.
5. Sprinkler heads and sprinkler specialties.
6. Owners Insurance carriers approval and in accordance with NFPA Pamphlet No. 13 requirements.
7. Design based on pipe schedule system for light hazard.
8. All cutting and patching throughout existing building as required for Fire Protection Work.
9. Tests, inspections, and approvals.
10. Guarantees.

03. WORK OF OTHER SECTIONS

a. The following work will be executed under other sections:

1. Finish Painting (except for shop coats) of walls, floors, and ceilings, cut and patched by this Contractor.

04. GENERAL SPRINKLER WORK

a. Provide complete revised automatic wet pipe sprinkler system, as indicated on the drawing and as required by rules of I.S.O. and other Agencies having jurisdiction. For items not covered by the above, follow "Standards of the NFPA for Installation of Sprinkler Systems", Pamphlet No. 13. System shall include new and relocated sprinklers, pipe, fittings, valves, seals, ladders, sign, diagrams, etc., as required.

b. Sprinkler equipment shall be products of Grinnell, Viking Corp., Automatic Sprinkler Company Inc., or other approved equal manufacturer selected from "List of Inspected Fire Protection Equipment and Materials" published annually by Rating Office and shall bear UL approved stamp or label.

c. Work shall not be concealed until such work has been inspected and approved by the inspecting authorities. If such work is concealed without inspection and approval, the Sprinkler Contractor shall be financially responsible for all work required to open and restore the concealed areas in addition to any required modification to the Sprinkler System.

d. Prepare detailed construction drawings, have them approved by Owner's Insurance Carrier and local Fire Sub-Code Official, and then submit stamped prints for final approval by Architect, all before any installation of work. After installation obtain certificate of inspection and approval from same agency.

e. Contractor may be required to provide the number of heads shown on drawing, in spite of Insurance Carriers' approval for a lesser amount, wherever in the opinion of the Architect the layout shown on the drawing is required for appearance and symmetry.

f. Clearances between sprinkler head deflectors and ceilings, walls, beams, electric or heating equipment or other obstructions, shall be in accordance with NFPA-13, Chapter 4. Locate all heads in the center of acoustical ceiling tiles or any other type of symmetrical ceiling grid unit unless shown or dimensioned otherwise. Locate heads to provide a symmetrical pattern acceptable to the Architect.

05. COOPERATION

a. Fire Protection Contractor shall work in conjunction with all other Contractors on the project. General layout of all lines and equipment shall be made in close cooperation with Plumbing, Heating, Electrical, and other Contractors to avoid delay or interference and to make piping work compact and neat.

b. Where any pipe, equipment, or apparatus conflicts with work of other Contractors, Sprinkler Contractor shall make all required offsets changes, etc. and consult with Architect before installing same and relocate such work as directed by Architect, as may be required without additional cost.

06. PERMITS, RULES, AND REGULATIONS

a. Obtain and pay for all licenses, permits, and inspection fees in connection with the work of this section.

b. Comply with all codes and regulations which may apply and install all Fire Protection work in accordance with the latest State of New Jersey Uniform Fire Code requirements and NFPA Pamphlet No. 13.

c. Furnish required certificate of approvals of installation upon completion of work.

07. MATERIALS AND WORKMANSHIP

a. All materials shall be new, conforming to standards as specified.

b. All labor shall be performed by skilled mechanics under experienced superintendence. All work shall be properly executed presenting a neat and workmanlike appearance subject to Architect's and Engineer's approval.

08. PROTECTION OF WORK AND MATERIAL

a. Take all precautions and be responsible for proper care and protection of all portions of all materials delivered and work performed, until the completion and acceptance of the work as a whole and issuance of certificates for final payments.

b. Cap all incomplete lines until ready for final connections after which they shall be thoroughly cleaned and left unobstructed.

c. Any and all portions of the work liable to damage by reason of operation and conducted under this Section, by weather or by others must be securely protected by temporary but substantial boarding or covering with must be maintained in position until not required, and its removal is approved by Architect.

09. CONTRACT DRAWINGS

a. Drawings accompanying these specifications are intended to show only general arrangement and extent of all work to be done. Determine exact location and arrangement of all work as work progresses.

b. Locations of equipment, outlets, etc., shown on drawings are approximately correct but are subject to such modification as may be found necessary or desirable at time of installation in order to meet any structural conditions and avoid interference with other work or equipment provided by others. Make such changes as are required without extra cost.

10. DRAIN AND TEST CONNECTIONS

a. Install horizontal piping graded to low points and in manner to make it possible to test and empty entire system, provide valves and piping of sizes and in locations in accordance with requirements of NFPA Pamphlet No. 13, and to meet the requirements of Insurance Carrier.

11. SPRINKLERS

a. Use Viking or approved equal 1/2" Concealed Residential Automatic Spray Sprinkler, pendent type, with white finish in dwelling units .
b. Use Viking or approved equal" OR pendents with 2 pc esc in non residential areas with white finish
c. Areas without drop ceilings use Viking or approved equal brass upright sprinkler head.
d. Ratings of heads shall be ordinary degree temperature 165 degree rating, except in locations near heaters, or for special occupancy areas, where they shall be of high temperature 286 degree rating as required in NFPA Pamphlet No. 13.

12. SUPPORTS, HANGERS

a. Support sprinkler piping from building structure by means of hangers, miscellaneous steel framed to building steel, other supports, as per requirements in NFPA Pamphlet No. 13. Piping shall not be supported directly from roof deck, other piping or equipment in building.

13. PIPE SLEEVES, ESCUTCHEONS

a. Furnish and set steel pipe sleeves to accommodate pipes passing through walls, floors, partitions; provide escutcheons at exposed finished surfaces pierced by pipes.

b. Where sleeves are installed in and between floors, slab on grade and in waterproof walls, the space between the pipe and the sleeve shall be caulked with a waterproof mastic. All pipes passing through finished floors, ceilings or walls exposed to view, shall be provided with chrome-plated escutcheons and secured with set screws.

c. For pipes passing through floors not on grade, provide sleeves extending above finish floor to prevent floor leakage and caulk between pipe and sleeve, all in accordance with Pamphlet No. 13.

14. PIPE FITTINGS

a. All materials used in the installation of the sprinkler system shall be listed as approved by Underwriters Lab. List of approved equipment, and the following materials shall conform to the respective specifications as specified.

b. Sprinkler piping above ground, black steel pipe, Schedule 10 and or 40, ASTM A-120 or welded seamless steel pipe in accordance with Paragraphs 3-1.1.2 and 3-1.1.3 of NFPA Code.

c. Fittings for steel pipe, black cast iron screwed 2" and under suitable for 175 psi wwp.

d. Couplings - Victaulic, Gustin Bacon, Standard weight, style #12 with Type H gasket, or approved equal. Groove pipe to accept coupling.

15. CUTTING AND PATCHING

a. Contractor must lay out his work in advance of construction in order that unnecessary cutting and patching will be avoided.

b. All drilling and patching for expansion bolts, hanger and other supports shall be done by this Contractor subject to approval of the Architect.

c. All cutting required for piping, etc., through existing walls, floors, etc., required for installation of Sprinkler piping shall be done by this Contractor. All necessary cutting shall be done by and with means approved by Architect, inclusive of holes in structural members, walls, floors, etc.

e. All painting, finishes, etc. shall be done by the General Contractor.

16. ALTERATION WORK - CHANGES AND REMOVALS

a. Make all such changes and removals of existing sprinkler work as required to facilitate the carrying out of the alterations as intended, as required to properly join new work with existing work; and all as necessary to carry out and complete any of the sprinkler work in accordance with the meaning and intent of the drawings and specifications.

b. Fire Protection system shut-down shall be kept to a minimum of time. Contractor shall make arrangements with Owner and Owner's Insurance carrier, notifying them of duration of shut-down period. Owner must be notified any time existing sprinkler system will be shut-down.

c. Notification of shut-down periods shall be in sufficient advance as to permit Owner to make temporary measures for protection and shall not be shut-down until approved by Owner.

17. CLEANING PIPING SYSTEM

a. After the piping systems have been tested and proven tight, the Contractor shall clean the system of dirt, scale, oil, grease, waste, and other foreign substances which may have accumulated during the process of installation.

18. CLEAN-UP

a. During the process of the work, the premises shall be kept reasonably free of all debris, cutting, and waste material resulting from the work under this section. All such debris and rubbish shall be removed from the site. Upon completion and final acceptance of the work, all debris, rubbish, left-over materials, tools and equipment shall be removed from the site.

19. RECORD DRAWINGS

a. During construction, Contractor shall keep an accurate record of all deviations between work as shown on the drawings and that which is actually installed. The cost of furnishing prints and preparing record drawings showing all deviations shall be borne by this Contractor and shall be included in his bid.

b. Preparation of record drawings shall be carried on as the work progresses and be available for inspection by the Architect. Two sets of approved prints shall be delivered to Architect before final payment for completed work will be made.

20. TESTS

a. Subject sprinkler system to tests required by and in presence of representatives of agencies having jurisdiction. Conduct, duration, other details of tests not covered by agencies requirements shall be in accordance with NFPA Pamphlet No. 13.

b. Provide instruments, equipment; pay expenses incurred in making tests, obtain approvals, certificates.

c. Where evidence of stoppage appears in piping or equipment, disconnect, clean, repair, reconnect obstructed parts, also bear cost of cutting, patching, adjoining work necessitated by such cleaning, repairing.

d. When ready for service, the entire system shall be inspected and tested in the presence of representative of bureau having jurisdiction, obtain certificates of their approval and submit same to the Architect.

21. GUARANTEE

a. Guarantee the installation free from defects of workmanship and material for a period of one year after filing notice of completion. Remedy any defects developing during this period free of charge.

b. System shall be guaranteed to meet the requirements of Owners Insurance Co., local Code Officials, and in accordance with all requirements of NFPA Pamphlet No. 13.

studio 1200, LLC
511 MILLBURN AVENUE
SHORT HILLS, NJ 07078
973.376.5111
973.376.5011
www.studio1200.com
CERITFICATE OF AUTHORIZATION # AC-710

Nancy Dougherty, AIA, LEED
NJ-AI 14861/NY-025099/CT-ARI.0011798

MEP CONSULTANT:
Oxbury Engineering Associates, L.L.C.
3 Gold Mine Road
Flanders, NJ 07836
Phone: (973) 252-6973
Fax: (973) 252-7028
COA: 24GA28096600
Rick Macieko, PE
NJ PE: 37111 USVI PE: 0-4263-1B
NY PE: 087618 MD PE: 50005
PA PE: 0777177 CT PE: 32573

REA PROJECT NO. 18-1451

NO	ISSUE	DATE
1	ISSUED FOR BID & PERMIT	10/24/18
2	NJSEA PERMIT REVIEW	12/4/18
3	REVISED PER NJSEA COMMENTS	01/02/19
4	REVISED PER DUST COLLECTION RECEP. & MILL AREA EXHAUST	01/24/19
5	REVISED PER NJSEA COMMENTS	02/07/19
6	CONTRACT CONFORMANCE SET	02/20/19

BOLERO SNORT BREWERY
316 20TH STREET
CARLSTADT, NJ

SPRINKLER SPECIFICATIONS

SP3.0