NOTES

1. NEW PARTITIONS: 2 1/2" MTL FRMG W/ 5/8" GYP BD EA SIDE & ACOUSTICAL INSULATION.
2. WINDOWS IN OFF. PARTITIONS TO MATCH EXISTING AT CONF. RM. ENT..
3. DOORS AND HARDWARE TO MATCH EXISTING AT OFFICE.

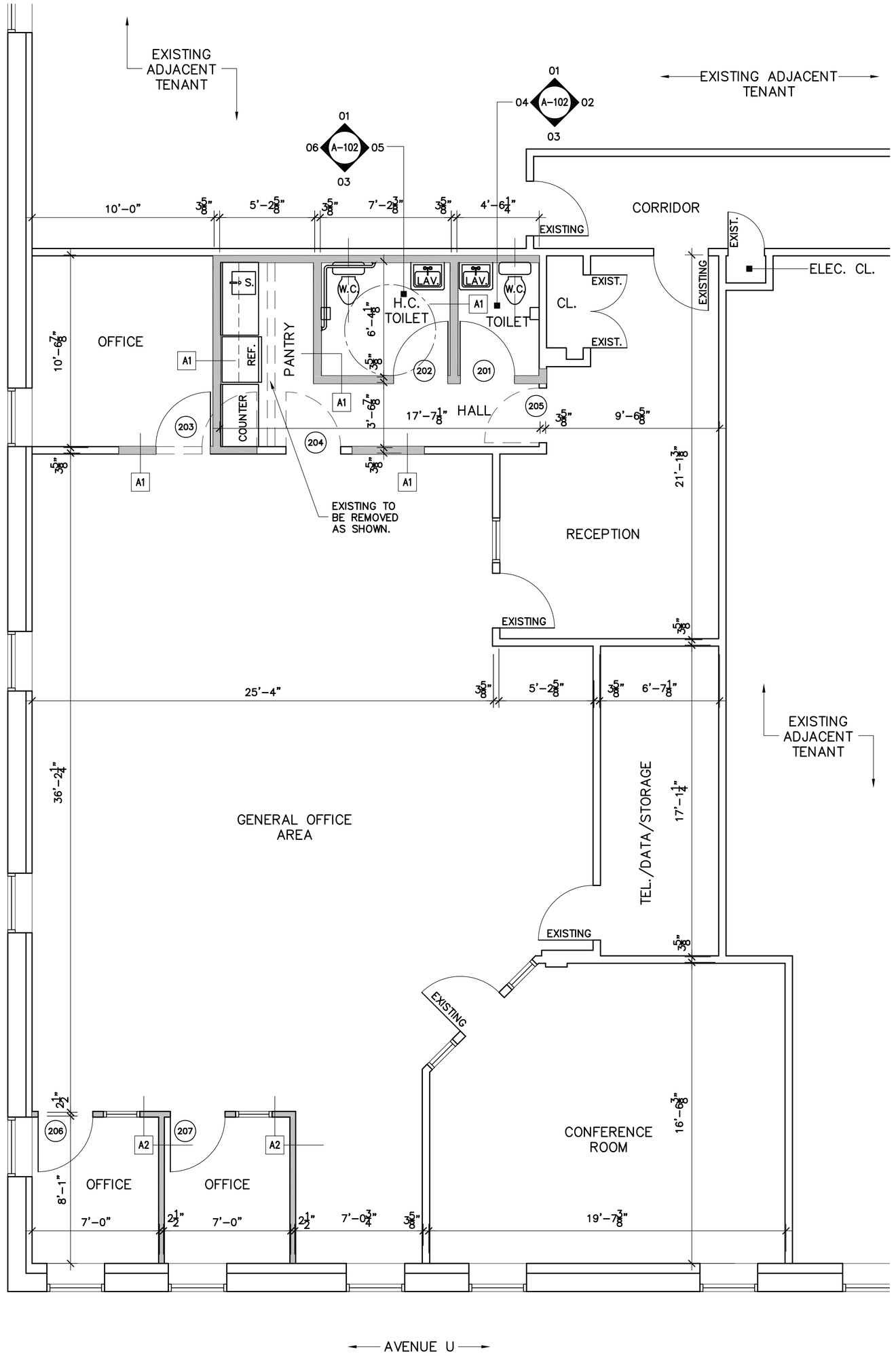

1 PARTIAL SECOND FLOOR PLAN

SCALE: 1/4" =1'-0"

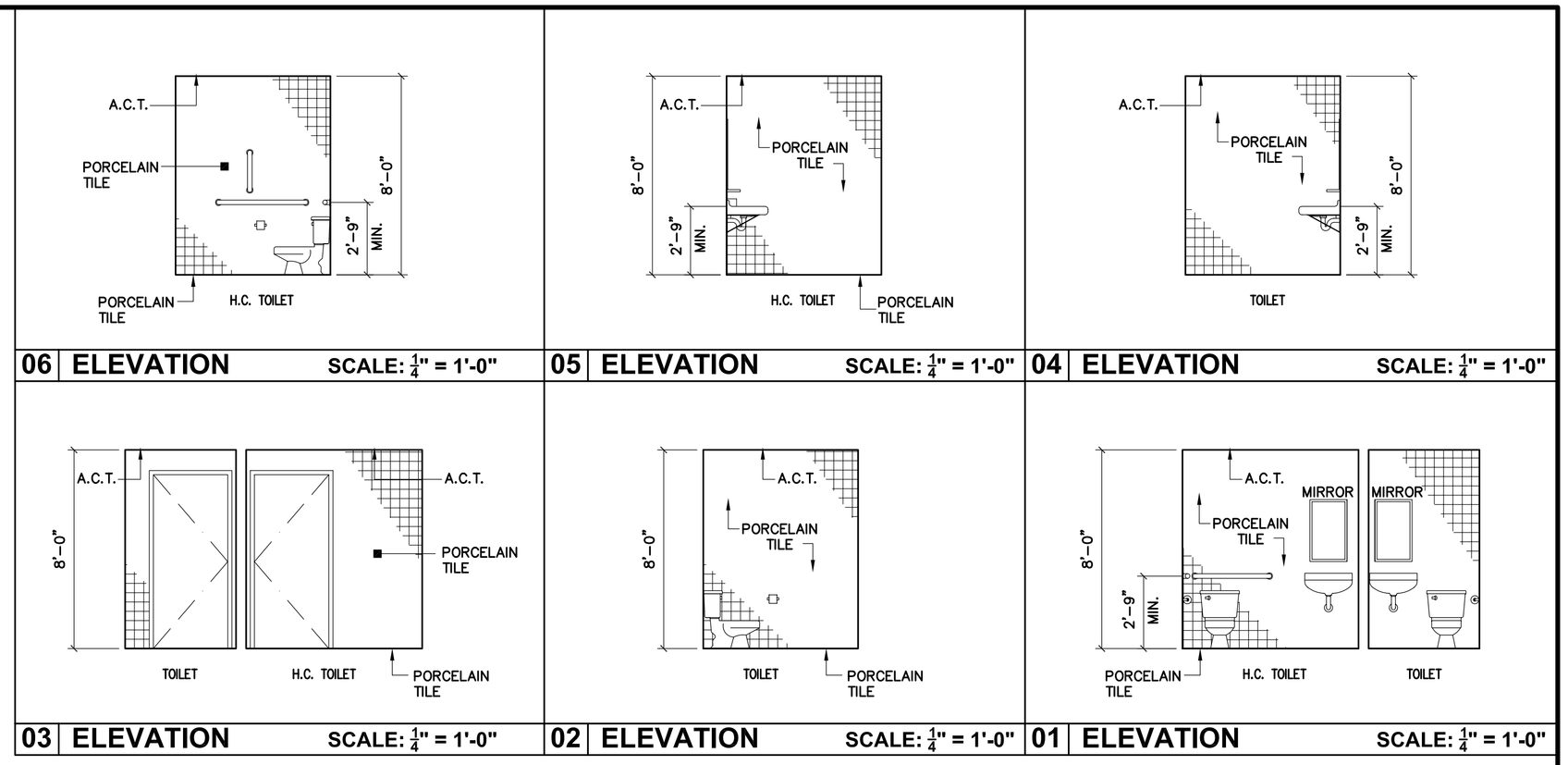

PARTITION TYPE A

SCALE: N.T.S.

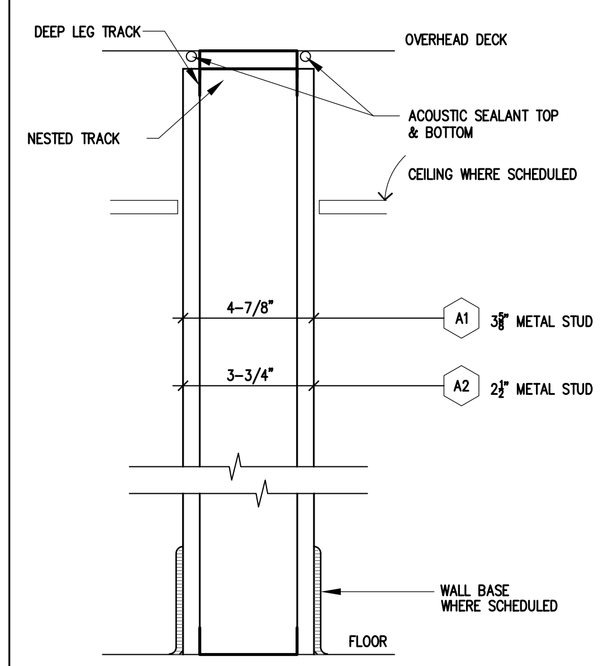

INTERIOR WALL : 20 GA METAL STUDS UNLESS OTHERWISE REQ'D. BY HEIGHT LIMITATION OF MANUFACTURER WITH ONE LAYER 5/8" GYP BD EACH SIDE. USE ONE LAYER 5/8" GYP BD MOISTURE PROOF WET ROOM SIDE.

METAL STUD	LIMITING HT 16" OC	FIRE RATING	STC RATING
2"	--	--	--
3-5/8"	16'-0"	--	--
4"	17'-3"	--	--
6"	20'-0"	--	--

PARTITION TYPE NOTES

LIMITING HEIGHTS INDICATED GIVE THE MAXIMUM UNSUPPORTED HEIGHT FOR THAT PARTITION TYPE BASED ON A DEFLECTION CRITERIA RATIO OF L/240. WHERE FLOOR TO STRUCTURE HEIGHT OF PARTITION EXCEEDS THE LIMITING HEIGHT, PROVIDE SUPPLEMENTAL BRACING TO THE STRUCTURE OVERHEAD AS REQUIRED TO MAINTAIN DEFLECTION RATIO WITHIN L/240. HEIGHTS LISTED ARE FOR INFORMATION ONLY BASED ON USG MANUFACTURER'S CATALOGUE

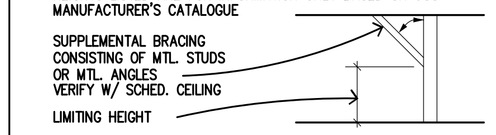

FOR PARTITIONS WITH "BRITTLE" FINISHES SUCH AS PLASTER AND CERAMIC TILE, DESIGN PARTITION SYSTEM TO MAINTAIN DEFLECTION RATIO WITHIN L/360.

SUSPENDED CEILINGS SHALL NOT BE CONSIDERED AS BRACING.

WHERE GYPSUM WALLBOARD IS THE SUBSTRATE FOR APPLICATION OF CERAMIC TILE, PROVIDE DENSSHIELD BOARD TILE BACKER. WHERE FIRE RESISTIVE CONSTRUCTION IS INDICATED, PROVIDE FIRE RESISTIVE W/R BOARD.

STC RATINGS SHOWN FOR SOUND WALLS ARE BASED ON LABORATORY TESTED ASSEMBLIES AND DO NOT NECESSARILY INDICATE THE ACTUAL STC RATING OF THE COMPLETED WORK.

REFER TO FINISH SCHEDULE AND INTERIOR ELEVATIONS FOR APPLIED FINISHES TO PARTITIONS

TOILET ACCESSORY SCHEDULE

	MANUFACTURER:	MODEL/MATERIAL:	NOTES:
MIRROR (M):	AMERICAN SPECIALTIES	0625 18x30 STAINLESS STEEL	SHELF COMBO
WASTE RECEPT. :	AMERICAN SPECIALTIES	0810-0811 STAINLESS STEEL	SURFACE MOUNTED
SOAP DISP (S):	AMERICAN SPECIALTIES	0345 STAINLESS STEEL	SURFACE MOUNTED
TOWEL DISPENSER (TD):	AMERICAN SPECIALTIES	8522 STAINLESS STEEL	SURFACE MOUNTED
TOILET TIS. DISP(TTD):	AMERICAN SPECIALTIES	20030 STAINLESS STEEL	SURFACE MOUNTED
GRAB-BARS (GB):	AMERICAN SPECIALTIES	3100 TYPE-01 x 18"	CONCEALED MOUNTING W/ SET SCREWS,
GRAB-BARS (GB):	AMERICAN SPECIALTIES	3100 TYPE-01 x 36"	CONCEALED MOUNTING W/ SET SCREWS,
GRAB-BARS (GB):	AMERICAN SPECIALTIES	3100 TYPE-01 x 42"	CONCEALED MOUNTING W/ SET SCREWS,

PROVIDE REQUIRED WALL REINFORCEMENT FOR ALL WALL MOUNTED BATHROOM ACCESSORIES AND KITCHEN EQUIPMENT

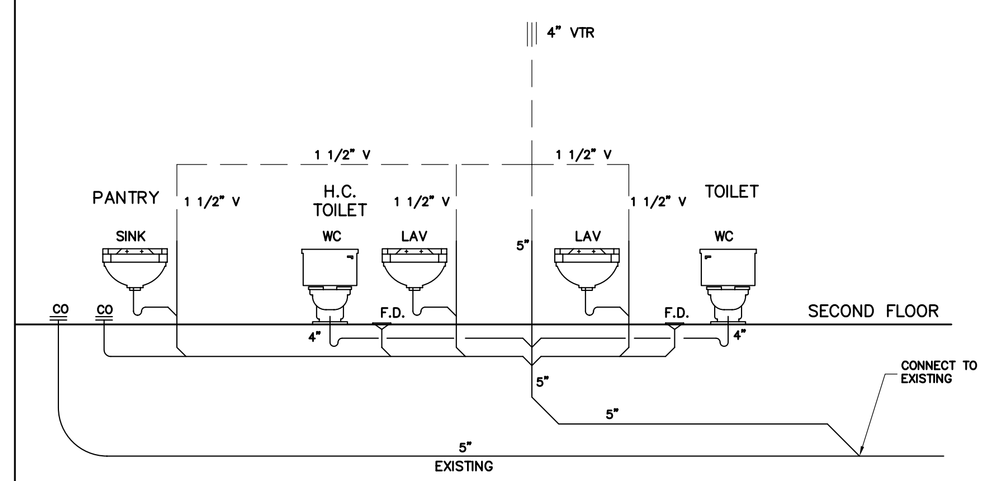

PLUMBING RISER DIAGRAM

N.T.S.

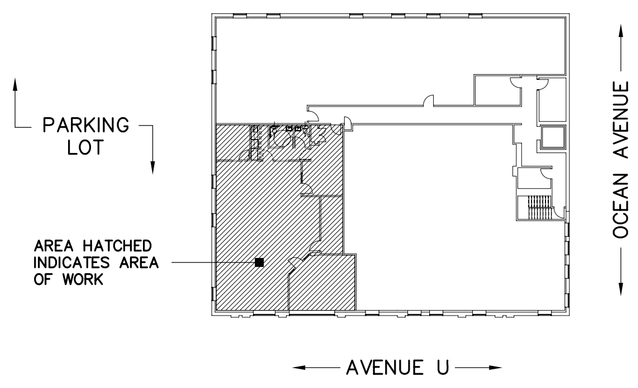

KEY PLAN

N.T.S.

RPF
ROBERT PHILLIP FERRARO
ARCHITECT, P.C.
292 BROADWAY, SUITE 200
LYNBROOK, NEW YORK 11563
TELEPHONE: (516) 593-3787 FAX: (516) 593-3675
E-MAIL: info@rpfarchitect.com

APPLICANT:
ANDREW WEISS P.E.
5510 17TH AVENUE
BROOKLYN, NY, 11204
TEL: 718-851-6351

Copyright © 2010, ROBERT PHILLIP FERRARO ARCHITECT, P.C. THIS DRAWING IS THE PROPERTY OF ROBERT PHILLIP FERRARO ARCHITECT, P.C. AND HAS BEEN PREPARED SPECIFICALLY FOR THE OWNER OF THIS PROJECT AT THIS SITE AND IS NOT TO BE USED FOR ANY OTHER PURPOSE, LOCATION OR OWNER WITHOUT THE CONSENT OF ROBERT PHILLIP FERRARO ARCHITECT, P.C.

REVISIONS

No	Date	Comments
1	6/24/11	TENANT REVISIONS

KEY PLAN

Project:
AVENUE U
SECOND FLOOR
BROOKLYN N.Y.

Drawing Title:
FLOOR PLAN, WALL DETAILS & TOILET ELEVATIONS

SEAL & SIGNATURE

DATE: DEC. 8, 2010
PROJ. NO: 2010-162
DRAWING BY: F.R.D.
CHKD BY:
DWG NO:
A-102.00
FILE: S 2 of 3