STOCKPORT BUSINESS & INNOVATION CENTRE:

FLOOR PLAN

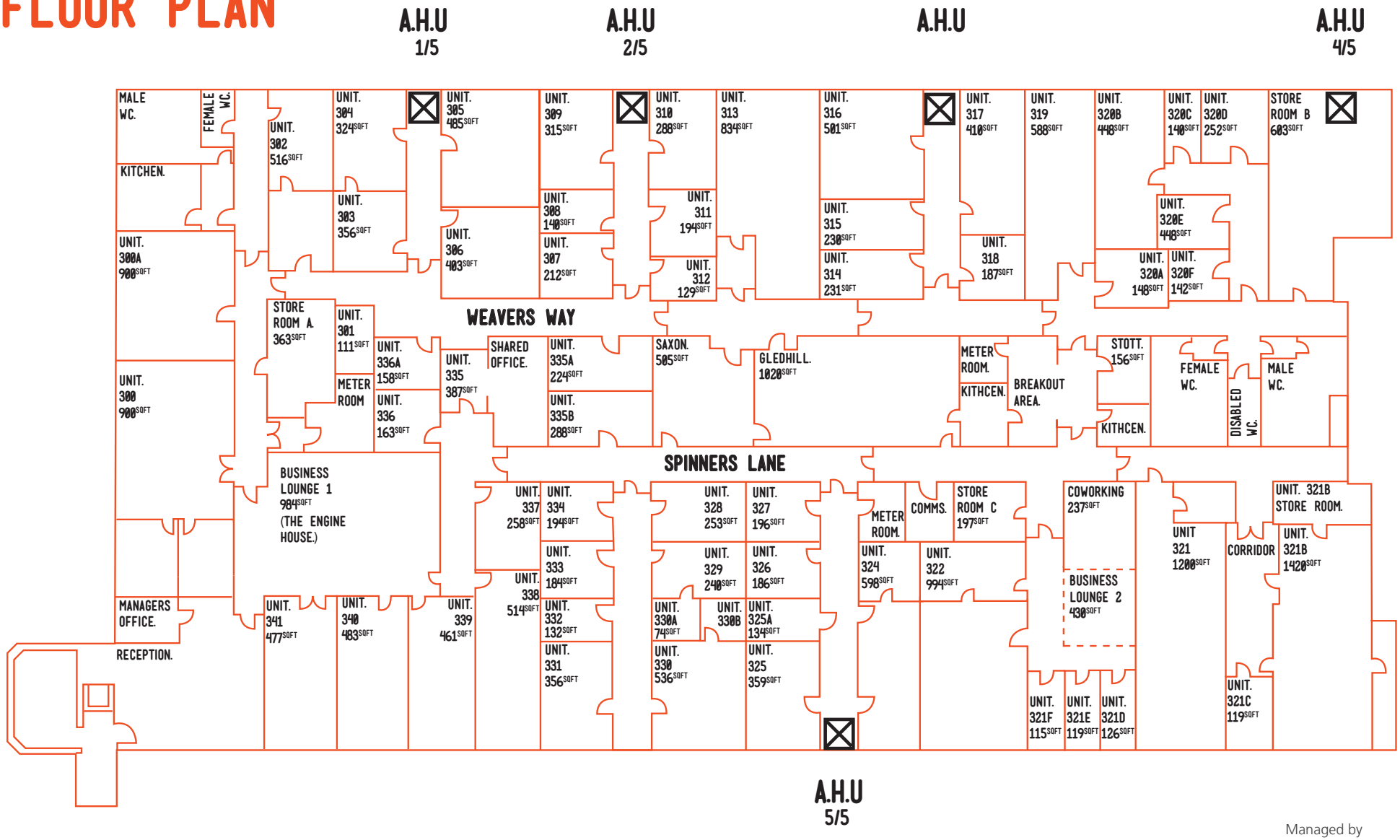

Managed by

SBIC

oxford innovation