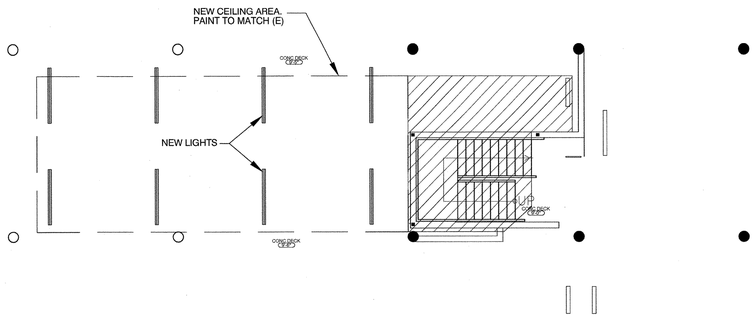

NEW UNDERGROUND REFLECTED CEILING | SCALE: 1/8"=1'-0" | 3

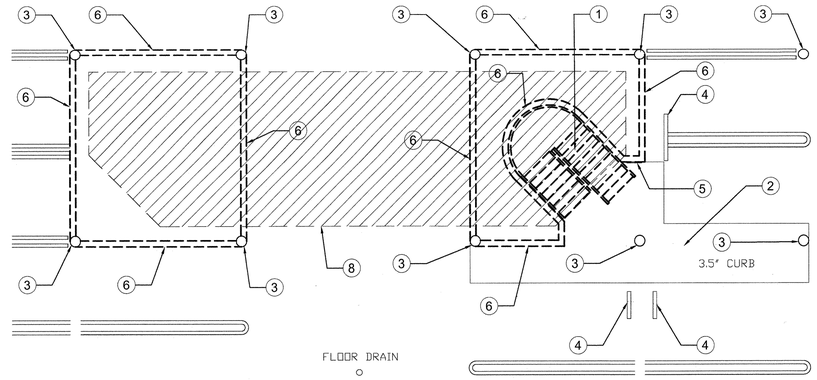

ENLARGED DEMO PLAN | SCALE: 1/8"=1'-0" | 2

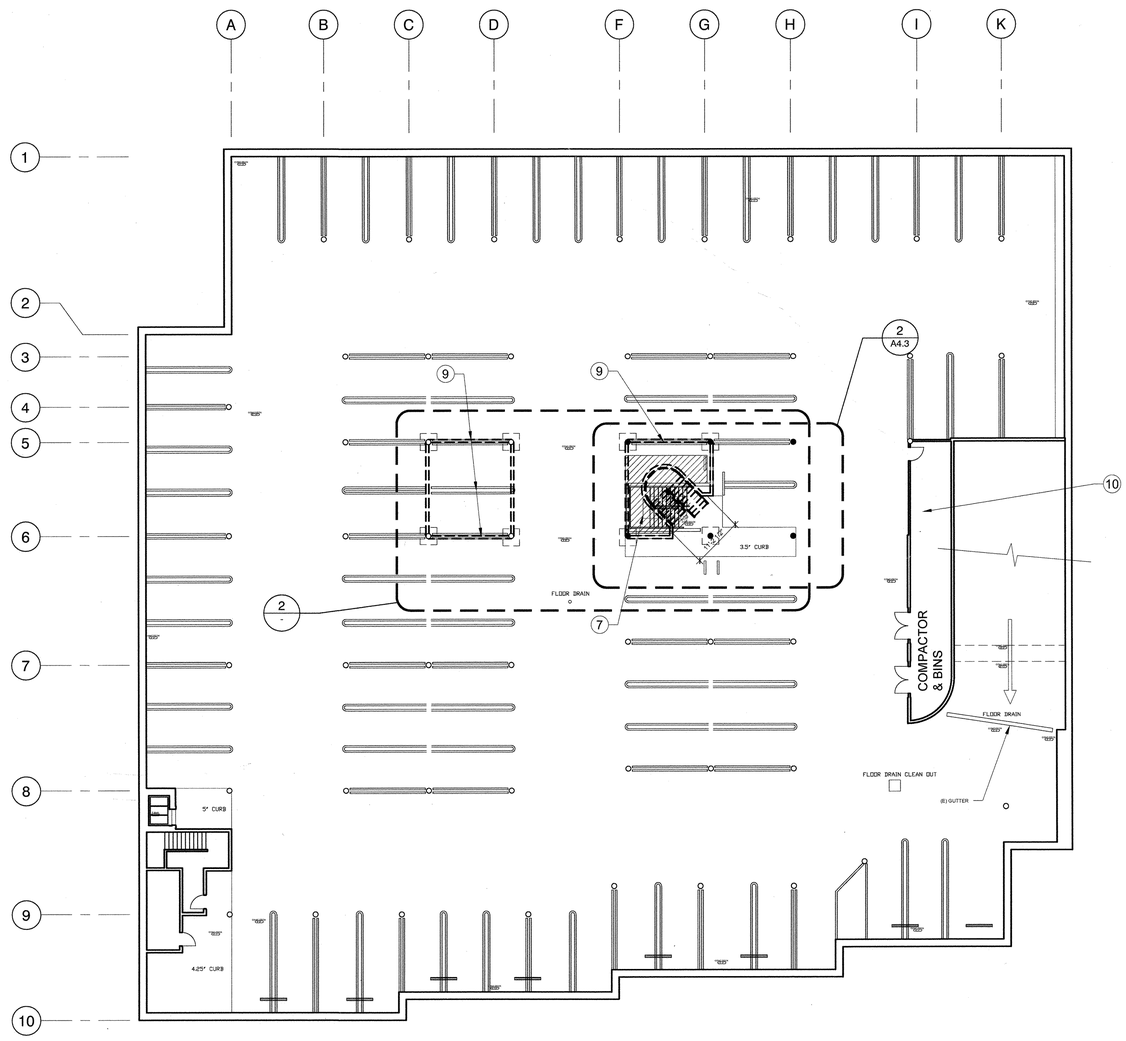

PROPOSED UNDERGROUND PARKING | SCALE: 1/16"=1'-0" | 1

DEMO KEYNOTES

1. CAREFULLY REMOVE (E) STAIR
2. (E) LEVEL CHANGE
3. (E) COLUMN
4. (E) CONCRETE WHEEL STOP
5. (E) SIGN TO BE RELOCATED
6. REMOVE PLANTER & CAP PLUMBING

CONSTRUCTION KEY NOTES

7. (N) STAIR, COORDINATE UPPER LANDING WITH STRUCTURAL DWGS.
8. (N) DECK ABOVE, SEE STRUCTURAL DETAILS
9. NEW PARKING STALL STRIPE TO MATCH ADJACENT
10. LOCATE (N) FOUNTAIN WATER, PUMP & FILTER

LEGEND

IN-FILLED COURTYARD AREA ABOVE. SEE STRUCTURAL DWGS. FOR DETAILS

GENERAL NOTES

TRACE
Design and Development
18301 Von Karman Ave. Suite 850
Irvine, CA 92612 TEL. 949-221-1183

CAPISTRANO COLLECTION

27184 ORTEGA HWY.
S. J. CAPISTRANO, CA. 92675

THIS DRAWING IS AN INSTRUMENT OF SERVICE, IS THE PROPERTY OF THE ARCHITECT AND MAY NOT BE REPRODUCED WITHOUT THE ARCHITECT'S PERMISSION AND UNLESS THE REPRODUCTION CARRIES THE ARCHITECT'S NAME. ALL DESIGN AND OTHER INFORMATION SHOWN ON THE DRAWING ARE FOR USE ON THE SPECIFIED PROJECT ONLY AND SHALL NOT BE USED OTHERWISE WITHOUT WRITTEN PERMISSION FROM THE ARCHITECT

CLIENT:

FORTUS PROPERTY GROUP

NOTES:

MECHANICAL, ELECTRICAL, AND PLUMBING PERMITS TO BE PULLED SEPARATELY

APPROVALS:

KEY PLAN:

NO.	REVISION	DATE

SHEET TITLE

PROPOSED UNDERGROUND PARKING

JOB NO.	DATE	SCALE
201103	12.12.12	

SHEET NO.

A-0.0

DETAIL	SCALE: 1/8"=1'-0" (5)	DETAIL	SCALE: 1/8"=1'-0" (4)	DETAIL	SCALE: 1/8"=1'-0" (3)	PATH TO MANSION PLAN	SCALE: 1/8"=1'-0" (2)

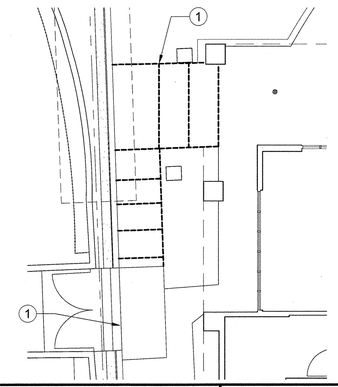

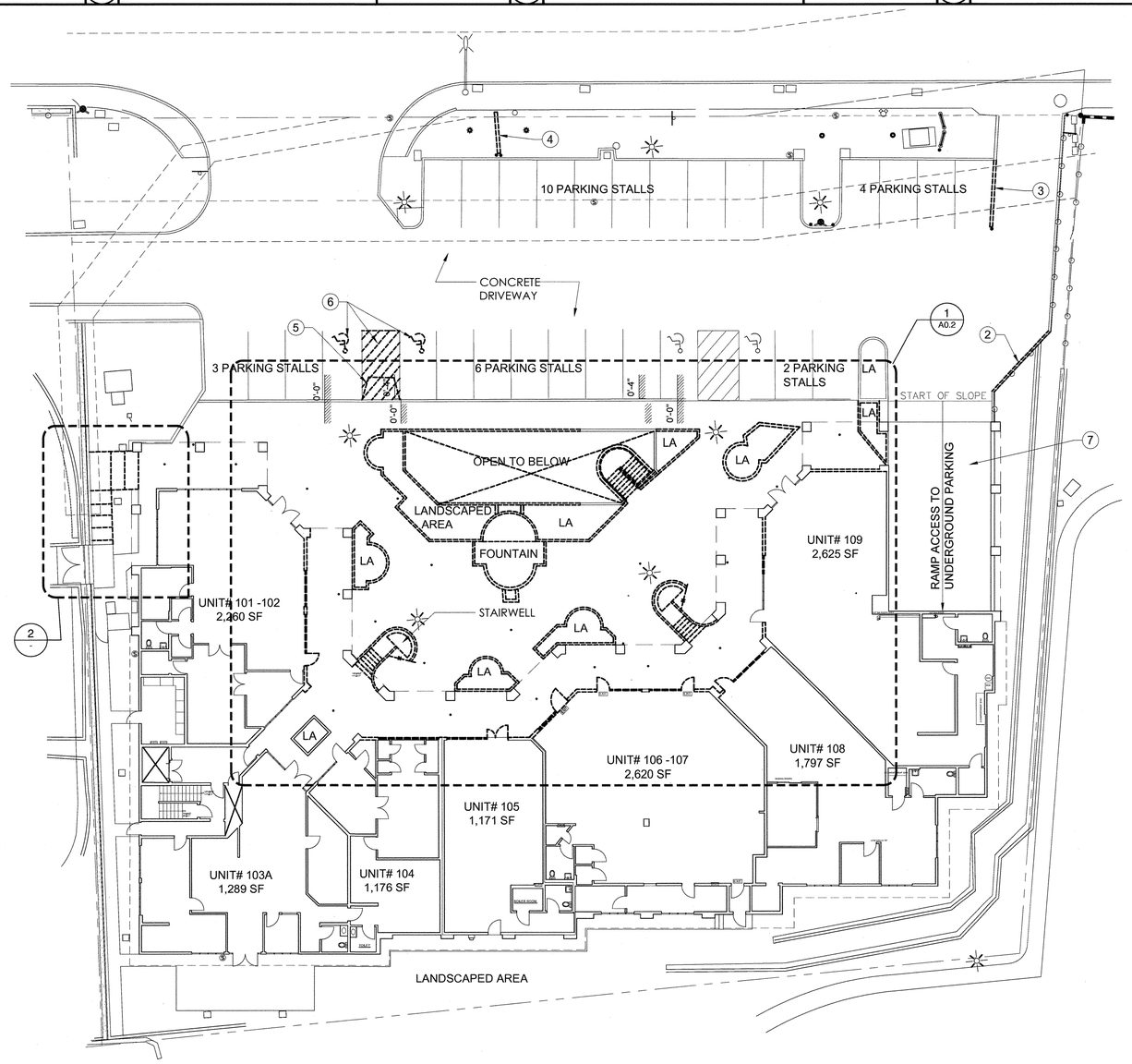

NOTE:
TENANTS TO HAVE CONTINUOUS ACCESS DURING CONSTRUCTION. NEW STORE FRONT TO BE IN PLACE PRIOR TO DEMOLTION OF EXISTING STOREFRONT.

DEMOLITION SITE PLAN / 1ST FLOOR PLAN | SCALE: 1/16"=1'-0" (1)

KEYNOTES

1. REMOVE PORTION OF STAIRS & PREPARE TO RECEIVE (N) FINISHES. SEE PLANS FOR DETAILS
2. REMOVE CONCRETE CURB & FENCE. PREPARE TO RECEIVE NEW TRASH ENCLOSURE, SEE STRUCTURAL
3. REMOVE CURB AND PREPARE TO RECEIVE (N) LANDSCAPED AREA. SEE PROPOSED PLAN
4. (E) MONUMENT SIGN TO BE REMOVED. RUN ELECTRICAL CONDUITS TO (N) LOCATION. SEE SHEET A1.0
5. REMOVE CONCRETE RAMP
6. REMOVE PAINT
7. DEMO (E) RAMP AND RECONFIGURE SLOPE

LEGEND

- (E) WALL TO BE REMOVED
- (E) WALL TO REMAIN

GENERAL NOTES

CAREFULLY REMOVE ALL LIGHT WALL FIXTURES ALONG STOREFRONT WALL. REMOVE ALL ELECTRICAL CONDUITS OR REROUTE IF NECESSARY.

TRACE
Design and Development
18301 Von Karman Ave. Suite 850
Irvine, CA 92612 TEL. 949-221-1183

CAPISTRANO COLLECTION

27184 ORTEGA HWY.
S. J. CAPISTRANO, CA. 92675

THIS DRAWING IS AN INSTRUMENT OF SERVICE, IS THE PROPERTY OF THE ARCHITECT AND MAY NOT BE REPRODUCED WITHOUT THE ARCHITECT'S PERMISSION AND UNLESS THE REPRODUCTION CARRIES THE ARCHITECT'S NAME. ALL DESIGN AND OTHER INFORMATION SHOWN ON THE DRAWING ARE FOR USE ON THE SPECIFIED PROJECT ONLY AND SHALL NOT BE USED OTHERWISE WITHOUT WRITTEN PERMISSION FROM THE ARCHITECT

CLIENT:

FORTUS PROPERTY GROUP

NOTES:

MECHANICAL, ELECTRICAL, AND PLUMBING PERMITS TO BE PULLED SEPARATELY

APPROVALS:

KEY PLAN:

NO.	REVISION	DATE

SHEET TITLE

DEMOLITION SITE PLAN / 1ST FLOOR PLAN

JOB NO.	DATE	SCALE
201103	12.12.12	

SHEET NO.

A0.1

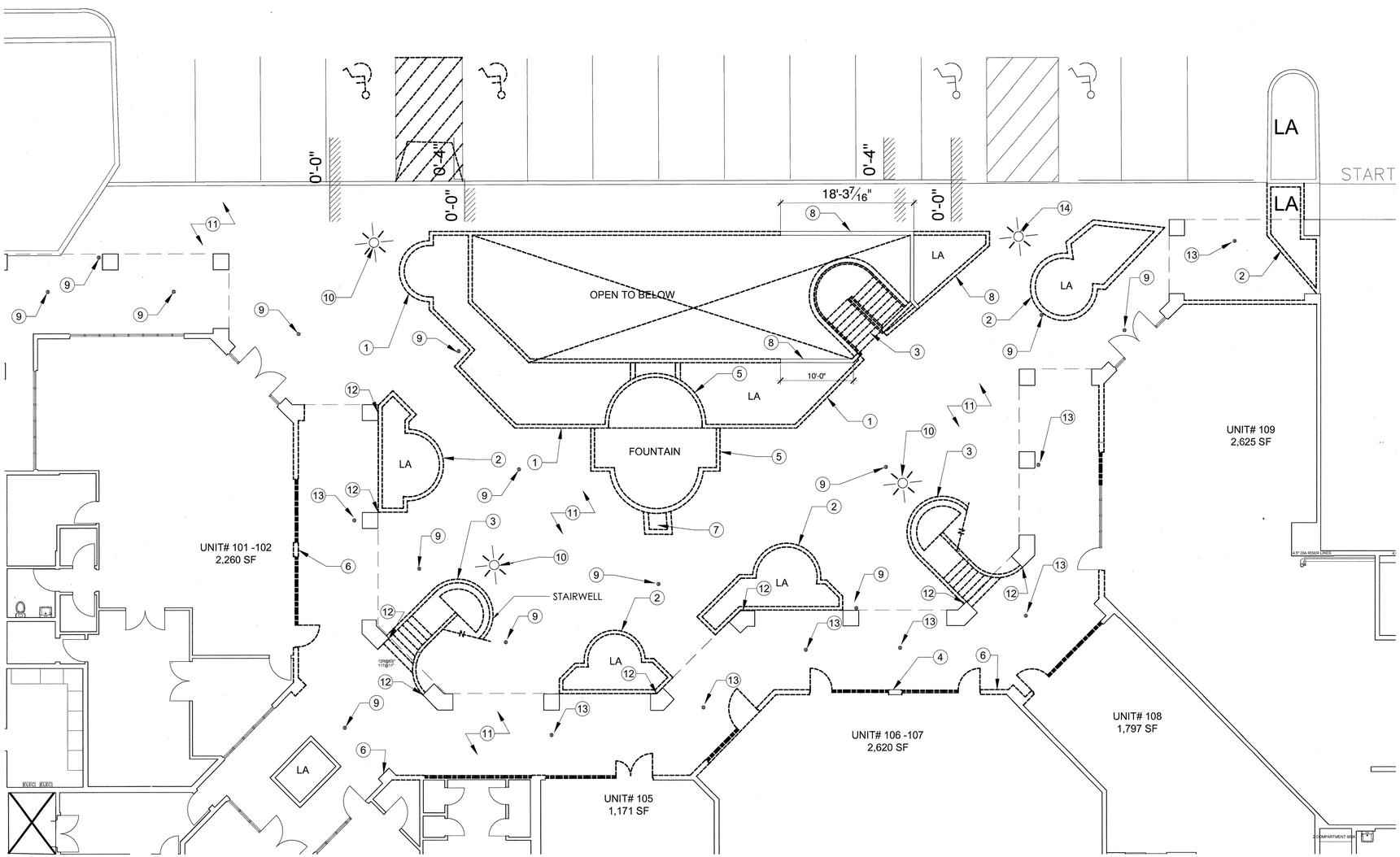

NOTE:
TENANTS TO HAVE CONTINUOUS ACCESS DURING CONSTRUCTION. NEW STORE FRONT TO BE IN PLACE PRIOR TO DEMOLTION OF EXISTING STOREFRONT.

N

DEMOLITION COURTYARD PLAN

SCALE: 1/8"=1'-0"

1

KEYNOTES

1. REMOVE PLANTER WALL
2. REMOVE PLANTER
3. REMOVE STAIRS, SEE SHEET A1.0 FOR DETAILS
4. REMOVE STOREFRONT & PREPARE TO RECEIVE (N) FINISHES. REFER TO PLANS & RCP FOR DETAILS
5. REMOVE WATER FOUNTAIN. CAP WATER & ELECTRICAL. PREPARE TO RECONNECT WITH NEW FOUNTAIN. SEE SHEET A1.0 FOR LOCATION.
6. REMOVE WALL LIGHT FIXTURE CAP OR RERUN ELECTRICAL CONDUITS IF REQUIRED
7. CAREFULLY REMOVE (E) PLAQUE AND RELOCATE
8. LOW WALL TO REMAIN
9. (E) FLOOR DRAIN TO REMAIN, KEEP FUNCTIONAL WITH NEW FINISH FLOOR, TYP.
10. LIGHT POLE TO REMAIN, PROTECT DURING DEMOLITION
11. REMOVE (E) FLOOR
12. PATCH AND REPAIR AS NECESSARY.
13. (E) PLUG AND CAP FLOOR DRAIN.
14. (E) LIGHT POLE TO BE REMOVED.

LEGEND

(E) WALL TO BE REMOVED

(E) WALL TO REMAIN

GENERAL NOTES

CAREFULLY REMOVE ALL LIGHT WALL FIXTURES ALONG STOREFRONT WALL. REMOVE ALL ELECTRICAL CONDUITS OR REROUTE IF NECESSARY.

NOTE, REMOVE ALL FLOOR TILES

TRACE
Design and Development
18301 Von Karman Ave. Suite 850
Irvine, CA 92612 TEL. 949-221-1183

CAPISTRANO COLLECTION

27184 ORTEGA HWY.
S. J. CAPISTRANO, CA. 92675

THIS DRAWING IS AN INSTRUMENT OF SERVICE, IS THE PROPERTY OF THE ARCHITECT AND MAY NOT BE REPRODUCED WITHOUT THE ARCHITECT'S PERMISSION AND UNLESS THE REPRODUCTION CARRIES THE ARCHITECT'S NAME. ALL DESIGN AND OTHER INFORMATION SHOWN ON THE DRAWING ARE FOR USE ON THE SPECIFIED PROJECT ONLY AND SHALL NOT BE USED OTHERWISE WITHOUT WRITTEN PERMISSION FROM THE ARCHITECT

CLIENT:

FORTUS PROPERTY GROUP

NOTES:

MECHANICAL, ELECTRICAL, AND PLUMBING PERMITS TO BE PULLED SEPARATELY

APPROVALS:

KEY PLAN:

NO.	REVISION	DATE

SHEET TITLE

DEMOLITION PLAN PLAZA LEVEL

JOB NO.	DATE	SCALE
201103	12.12.12	

SHEET NO.

A0.2

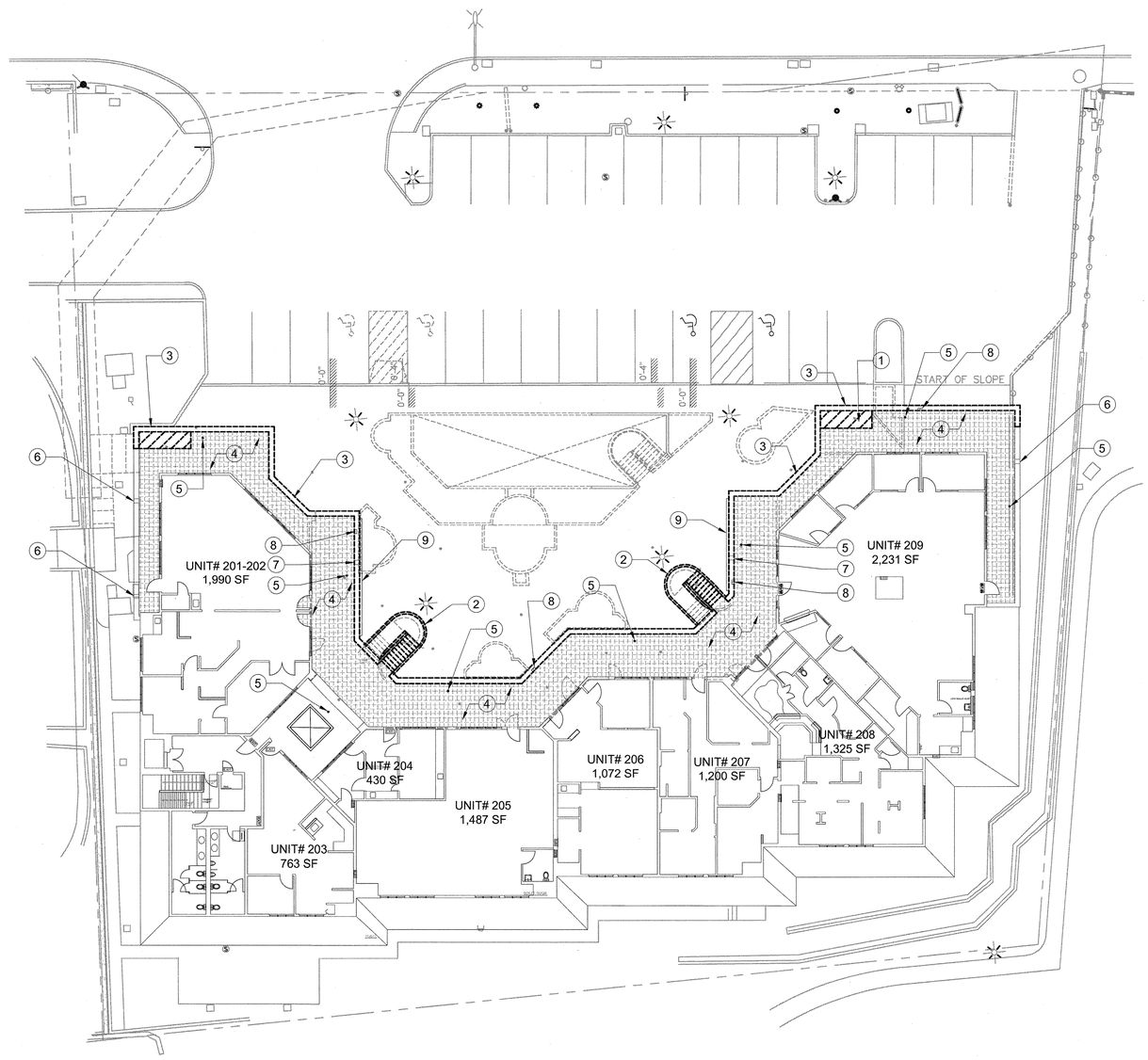

NOTE: TEMPORARY GUARDRAIL REQUIRED DURING CONSTRUCTION. GENERAL CONTRACTOR TO PROVIDE DETAILS.

N

KEYNOTES

1. REMOVE PARTIAL DECK TO MAKE ROOM FOR (N) STAIR. SEE STRUCTURAL DWGS. FOR DETAILS.
2. REMOVE STAIRS, PATCH & PREPARE DAMAGED AREA & RECEIVE FINISHES
3. REMOVE GUARD RAIL WALL AS NECESSARY.PREPARE TO RECEIVE (N) RAILS. SEE SHEET A4.4 FOR DETAILS
4. REMOVE EXISTING TILE.
5. (E) FLOOR DRAIN TO REMAIN, KEEP FUNCTIONAL WITH NEW FINISH FLOOR, TYP.
6. (E) OVERFLOW TO REMAIN
7. (E) OVERFLOW TO REMOVED
8. (E) WATER BIB TO BE REMOVED AND CAPPED.
9. (N) RAIN GUTTER

LEGEND

- (E) WALL TO BE REMOVED
- (E) WALL TO REMAIN
- (E) PORTION OF DECK TO BE REMOVED. SEE STRUCTURAL DWGS. FOR DETAILS.

TRACE
Design and Development
18301 Von Karman Ave. Suite 850
Irvine, CA 92612 TEL. 949-221-1183

CAPISTRANO COLLECTION

27184 ORTEGA HWY.
S. J. CAPISTRANO, CA. 92675

THIS DRAWING IS AN INSTRUMENT OF SERVICE, IS THE PROPERTY OF THE ARCHITECT AND MAY NOT BE REPRODUCED WITHOUT THE ARCHITECT'S PERMISSION AND UNLESS THE REPRODUCTION CARRIES THE ARCHITECT'S NAME. ALL DESIGN AND OTHER INFORMATION SHOWN ON THE DRAWING ARE FOR USE ON THE SPECIFIED PROJECT ONLY AND SHALL NOT BE USED OTHERWISE WITHOUT WRITTEN PERMISSION FROM THE ARCHITECT

CLIENT:

FORTUS PROPERTY GROUP

NOTES:

MECHANICAL, ELECTRICAL, AND PLUMBING PERMITS TO BE PULLED SEPARATELY

APPROVALS:

KEY PLAN:

NO.	REVISION	DATE

SHEET TITLE

2ND FLOOR DEMOLITION PLAN

JOB NO.	DATE	SCALE
201103	12.12.12	

SHEET NO.

A-0.3

2ND FLOOR DEMOLITION PLAN

SCALE: 1/16"=1'-0" (1)

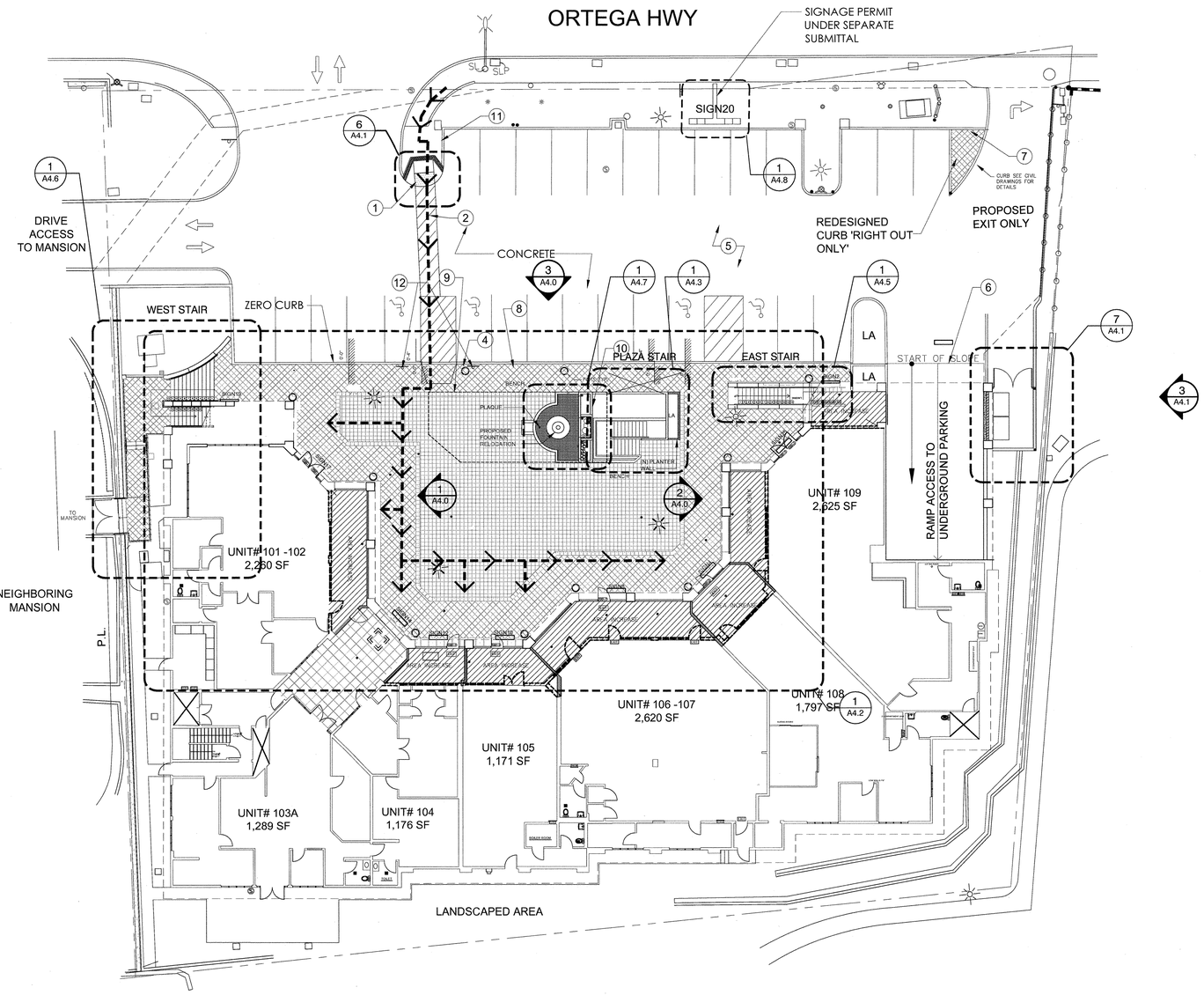

FIRST FLOOR PROPOSED PLAN / SITE PLAN

SCALE: 1/16"=1'-0" (1)

NOTES

KEYNOTES:

KEYNOTES ARE REFERENCED ON THE DRAWING WITH THIS SYMBOL:

1. (N) ADA CURB CUT SEE DETAILS SHEET A4.1 OR 5
2. (N) 48" ADA PATH
3. (N) 6" Ø BOLLARD, TYP.
4. (N) COURT PLANTER, TYP.
5. (E) A.C. PAVING
6. RE-ADJUSTED RAMP SLOPE. SEE STRUCTURAL DWGS. FOR DETAILS
7. (N) CURB & LANDSCAPE. REFER TO CIVIL DWGS.
8. BENCH, BY OTHERS, TYP.
9. IN-FILLED OPENING. SEE STRUCTURAL DWGS. FOR DETAILS
10. PROPOSED WATER FOUNTAIN WITH RELOCATED PLAQUE.
11. RELOCATED LIGHT POLE, SEE ELECTRICAL DWGS. FOR DETAILS
12. PROVIDE NEW ADA POLE SIGNS AS PER ADA STANDARDS
13. REMOVE (E) STUCCO FINISH. APPLY GYP. BD. OVER (E) SURFACE. PREP AND PAINT

GENERAL NOTES

REFER TO STRUCTURAL DWGS. BEFORE REMOVING PAVING @ RAMP AREA

SIGNAGE UNDER SEPARATE PERMIT.

LEGEND

- ENLARGED TENANT AREA, FLOORING TO MATCH (E) TENANT SPACE FLOORING
- (E) WALL TO REMAIN
- REDEISGNED CURB AREA
- (N) 2X6 MTL STUD @ 16" O.C. W/ R-11 BATT INSULATION. ALIGN TO (E) WALL. 5/8" TYPE X GYP. BD. ON BOTHSIDES.
- PATH OF TRAVEL

TRACE
Design and Development
18301 Von Karman Ave. Suite 850
Irvine, CA 92612 TEL. 949-221-1183

CAPISTRANO COLLECTION

27184 ORTEGA HWY.
S. J. CAPISTRANO, CA. 92675

THIS DRAWING IS AN INSTRUMENT OF SERVICE, IS THE PROPERTY OF THE ARCHITECT AND MAY NOT BE REPRODUCED WITHOUT THE ARCHITECT'S PERMISSION AND UNLESS THE REPRODUCTION CARRIES THE ARCHITECT'S NAME. ALL DESIGN AND OTHER INFORMATION SHOWN ON THE DRAWING ARE FOR USE ON THE SPECIFIED PROJECT ONLY AND SHALL NOT BE USED OTHERWISE WITHOUT WRITTEN PERMISSION FROM THE ARCHITECT

CLIENT:

FORTUS PROPERTY GROUP

NOTES:

MECHANICAL, ELECTRICAL, AND PLUMBING PERMITS TO BE PULLED SEPARATELY

APPROVALS:

KEY PLAN:

NO.	REVISION	DATE

SHEET TITLE

FIRST FLOOR PLAN / SITE PLAN

JOB NO.	DATE	SCALE
201103	12.12.12	

SHEET NO.

A-1.0

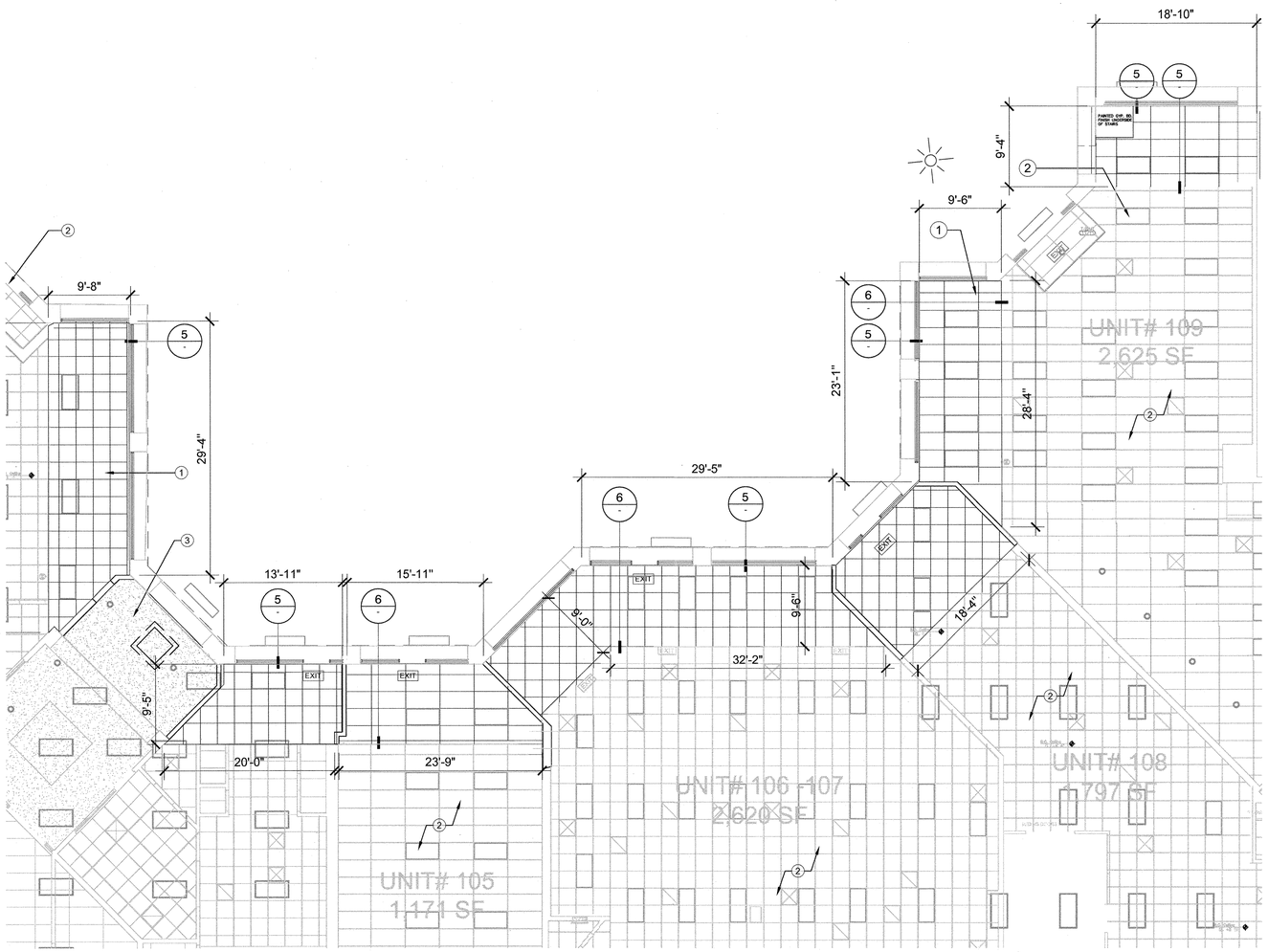

PARTIAL FIRST FLOOR PROPOSED REFLECTED CEILING PLAN — SCALE: 1/8"=1'-0" — 3

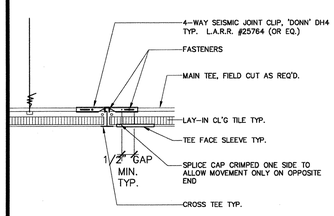

NOTE: PROVIDE SEISMIC JOINT AT MAIN AND CROSS-RUNNERS AS REQ'D TO DIVIDE CL'G INTO 2,500 SQ. FT. MAX. ZONES, LENGTH/WIDTH RATIO OF 1:4 MAX.

CEILING DETAIL — SCALE: NTS — 6

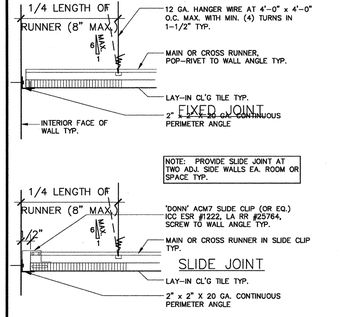

NOTE: PROVIDE SLIDE JOINT AT TWO ADJ. SIDE WALLS EA. ROOM OR SPACE TYP.

CEILING DETAIL — SCALE: NTS — 5

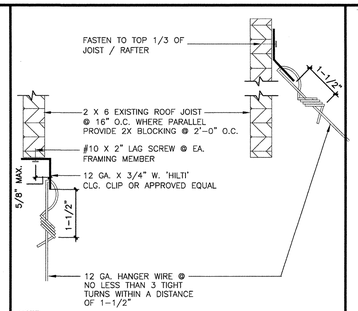

NOTE:
1. REFER TO COVER SHEET FOR ADDITIONAL ANCHOR NOTES

CEILING DETAIL — SCALE: NTS — 4

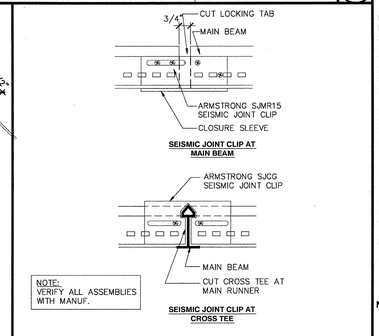

NOTE: VERIFY ALL ASSEMBLIES WITH MANUF.

CEILING DETAIL — SCALE: NTS — 2

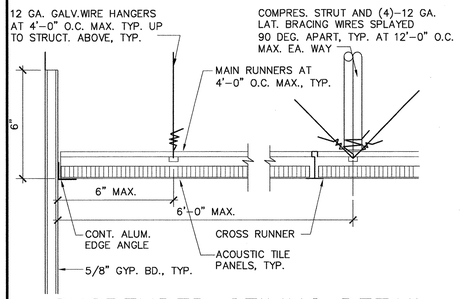

SUSPENDED CEILING DETAIL

SUSPENDED ACOUSTIC CEILING SYSTEM FROM STRUCTURE ABOVE AS FOLLOWS:
FROM WOOD STRUCTURE: #10 CLOSED EYE SCREW.
FROM STEEL PURLINS: 'HILTI' CC27/DN22 COMBINATION CEILING CLIPS/SHOT PINS (ICC ESR #2184, L.A.R.R. #25651) OR EQ., OR CLAMP ON 'UNISTRUT' CHANNELS AT 4'-0" O.C. PARALLEL WITH MAIN RUNNERS BELOW.
FROM STEEL BAR JOISTS: TIE THRU BOTTOM FLANGES.
FROM CONCRETE STEEL DECK OR CONCRETE DECK: 'HILTI' TB 27 S12 (ICC ESR #2184, L.A.R.R. #25651) OR EQ.

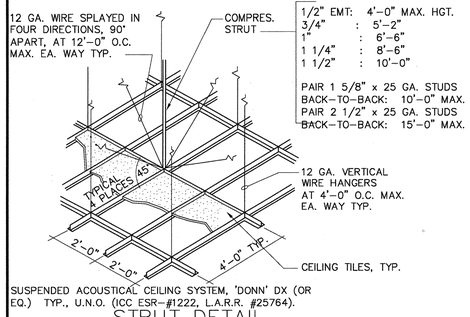

SUSPENDED ACOUSTICAL CEILING SYSTEM, 'DONN' DX (OR EQ.) TYP., U.N.O. (ICC ESR-#1222, L.A.R.R. #25764).

STRUT DETAIL

711.3.1 Ceiling panels. Where the weight of lay-in ceiling panels, used as part of fire-resistance-rated floor/ceiling or roof/ceiling assemblies, is not adequate to resist an upward force of 1 lb/ft.2 (48 Pa), wire or other approved devices shall be installed above the panels to prevent vertical displacement under such upward force. Special Inspection for suspended ceiling is required. Section 1705

CEILING SUSPENSION NOTES
HANGER ATTACHMENT DEVICES SHALL BE AN APPROVED TYPE. SUSPENSION WIRES SHALL NOT BE SMALLER THAN NO. 12 GAUGE SPACED AT 4'-0" O.C. ALONG EACH MAIN RUNNER. EACH WIRE SHALL BE ATTACHED TO THE CEILING MEMBER AND THE SUPPORT ABOVE WITH A MINIMUM OF THREE TURNS. CONNECTION DEVICES AT THE SUPPORTING CONSTRUCTION SHALL BE CAPABLE OF CARRYING NOT LESS THAN 100 POUNDS. WIRES SHALL NOT HANG MORE THAN 1 IN 6 OUT OF PLUM, UNLESS COUNTERSLOPING WIRES ARE PROVIDED. A TRAPEZE SHALL BE USED WHERE OBSTRUCTIONS PRECLUDE DIRECT SUSPENSION.

THE TERMINAL ENDS OF EACH CROSS RUNNER AND MAIN RUNNER SHALL BE INDEPENDENTLY SUPPORTED A MAXIMUM OF 8" FROM THE WALL OR CEILING WITH NO. 12 GAUGE WIRE.

HORIZONTAL RESTRAINTS SHALL BE EFFECTED BY FOUR NO. 12 GAUGE WIRES SECURED TO THE MAIN RUNNER WITHIN 2" OF THE CROSS RUNNER INTERSECTION AND SPLAYED 90 DEGREES FROM EACH OTHER AT AN ANGLE NOT TO EXCEED 45 DEGREES FROM THE PLANE OF THE CEILING. A STRUT FASTENED TO THE MAIN RUNNER SHALL BE EXTENDED UP AND FASTENED TO THE STRUCTURAL MEMBERS SUPPORTING THE ROOF OR FLOOR ABOVE. THE STRUT SHALL BE ADEQUATE TO RESIST THE VERTICAL COMPONENT INDUCED BY THE BRACING WIRES. THESE HORIZONTAL RESTRAINT POINTS SHALL BE PLACED 12'-0" ON CENTER IN BOTH DIRECTIONS WITH THE FIRST POINT WITHIN 6'-0" FROM EACH WALL. ATTACHMENT OF THE RESTRAINT WIRES SHALL BE ADEQUATE FOR THE LOAD IMPOSED.

LATERAL FORCE BRACING MEMBERS SHALL BE SPACED A MINIMUM OF 6" FROM ALL HORIZONTAL PIPING OR DUCTWORK THAT IS NOT PROVIDED WITH BRACING RESTRAINTS FOR HORIZONTAL FORCES. BRACING WIRES SHALL BE ATTACHED TO THE GRID AND TO THE STRUCTURE IN SUCH A MANNER THAT THEY CAN SUPPORT A DESIGN LOAD OF NOT LESS THAN 200 POUNDS OR THE ACTUAL DESIGN LOAD WHICHEVER IS GREATER, WITH A SAFETY FACTOR OF 2.

PERIMETER MEMBERS SHALL BE CONSIDERED AS AESTHETIC CLOSURES WITH NO STRUCTURAL VALUE. ENDS OF MAIN RUNNERS AND CROSS RUNNERS SHALL BE TIED TOGETHER TO PREVENT THEIR SPREADING. MAIN RUNNERS AND CROSS RUNNERS MAY BE ATTACHED AT TWO ADJACENT WALLS WITH CLEARANCE BETWEEN THE WALL AND RUNNERS MAINTAINED AT THE OTHER TWO WALLS.

HEAVY DUTY CEILING SYSTEMS (CATEGORY D) SHALL BE USED FOR THE SUPPORT OF LIGHT FIXTURES. ALL LIGHTING FIXTURES SHALL BE POSITIVELY ATTACHED TO THE SUSPENDED CEILING SYSTEM. THE ATTACHMENT DEVICE SHALL HAVE A CAPACITY OF 100% OF THE LIGHTING FIXTURE WEIGHT ACTING IN ANY DIRECTION. WHEN INTERMEDIATE SYSTEMS ARE USED, NO. 12. GAUGE HANGER WIRES SHALL BE ATTACHED TO THE GRID MEMBERS WITHIN 3" OF EACH CORNER OF EACH FIXTURE. TANDEM FIXTURES MAY UTILIZE COMMON WIRES. WHEN HEAVY DUTY SYSTEMS ARE USED, SUPPLEMENTAL HANGERS ARE NOT REQUIRED IF A 48" MODULAR PATTERN IS FOLLOWED.

LIGHTING FIXTURES WEIGHING LESS THAN 56 POUNDS SHALL HAVE, IN ADDITION TO THE REQUIREMENTS ABOVE, TWO NO. 12 GAUGE HANGERS CONNECTED FROM THE FIXTURE HOUSING TO THE STRUCTURE ABOVE. THESE WIRES MAY BE SLACK. LIGHTING FIXTURES WEIGHING 56 POUNDS OR MORE SHALL BE SUPPORTED DIRECTLY FROM THE STRUCTURE ABOVE BY APPROVED HANGERS. PENDANT HUNG LIGHTING FIXTURES SHALL BE SUPPORTED DIRECTLY FROM THE STRUCTURE ABOVE USING NO. 9 GAUGE WIRES OR APPROVED ALTERNATE SUPPORT WITHOUT USING THE CEILING SYSTEM FOR DIRECT SUPPORT.

CEILING MOUNTED AIR TERMINALS OR SERVICES WEIGHING LESS THAN 20 POUNDS SHALL BE POSITIVELY ATTACHED TO THE MAIN RUNNERS OR CROSS RUNNERS WITH THE SAME CARRYING CAPACITY AS MAIN RUNNERS. SERVICES WEIGHING 20 POUNDS BUT LESS THAN 56 POUNDS SHALL HAVE, IN ADDITION TO THE ABOVE, TWO NO. 12 GAUGE HANGERS CONNECTED FROM THE TERMINAL OR SERVICE TO THE STRUCTURE ABOVE. THESE WIRES MAY BE SLACK. SERVICE WEIGHING MORE THAN 56 POUNDS SHALL BE SUPPORTED DIRECTLY FROM THE STRUCTURE ABOVE BY APPROVED HANGERS.

ALL PARTITIONS SHALL BE BRACED INDEPENDENTLY FROM THE CEILING SYSTEM.

NOTE: ALL MAIN BEAMS TO BE HEAVY DUTY WHEN HEAVY DUTY SYSTEM IS USED SUPPLEMENTAL HANGERS ARE NOT REQUIRED IF 48" MODULAR HANGER PATTERN IS FOLLOWED.

SUSPENDED CEILING TILE DETAIL — SCALE: NTS — 1

NOTES

KEYNOTES:

KEYNOTES ARE REFERENCED ON THE DRAWING WITH THIS SYMBOL:

1. NEW CEILING TO MATCH EXISTING T-BAR
2. EXISTING CEILING TO REMAIN
3. EXISTING GYP. BD. CEILING
4.
5.
6.
7.
8.

LEGEND

- 2'x4' FLUORESCENT LIGHT FIXTURE
- 2'x2' FLUORESCENT LIGHT FIXTURE
- 2'x2' SUPPLY
- 2'x2' RETURN
- EXIT — ILLUMINATED EXIT SIGN
- NEW WALL

GENERAL NOTES

WHEN PROVIDING (N) CEILING, MAKE SURE IT REMAINS AT SAME HEIGHT AS EXISTING ADJACENT CEILING.

DEMOLITION NOTES

REMOVE (E) FIXTURES @ STUCCO UNDER (E) WALK WAY. SPRINKLER HEADS TO BE READJUSTED AFTER T-GRID CLNG IS IN PLACE.

TRACE
Design and Development
18301 Von Karman Ave. Suite 850
Irvine, CA 92612 TEL. 949-221-1183

CAPISTRANO COLLECTION

27184 ORTEGA HWY.
S. J. CAPISTRANO, CA. 92675

THIS DRAWING IS AN INSTRUMENT OF SERVICE, IS THE PROPERTY OF THE ARCHITECT AND MAY NOT BE REPRODUCED WITHOUT THE ARCHITECT'S PERMISSION AND UNLESS THE REPRODUCTION CARRIES THE ARCHITECT'S NAME. ALL DESIGN AND OTHER INFORMATION SHOWN ON THE DRAWING ARE FOR USE ON THE SPECIFIED PROJECT ONLY AND SHALL NOT BE USED OTHERWISE WITHOUT WRITTEN PERMISSION FROM THE ARCHITECT

CLIENT:

FORTUS PROPERTY GROUP

NOTES:
MECHANICAL, ELECTRICAL, AND PLUMBING PERMITS TO BE PULLED SEPARATELY

APPROVALS:

KEY PLAN:

NO.	REVISION	DATE

SHEET TITLE

PROPOSED REFLECTED CEILING PLAN

JOB NO.	DATE	SCALE
201103	12.12.12	

SHEET NO.

A1.1

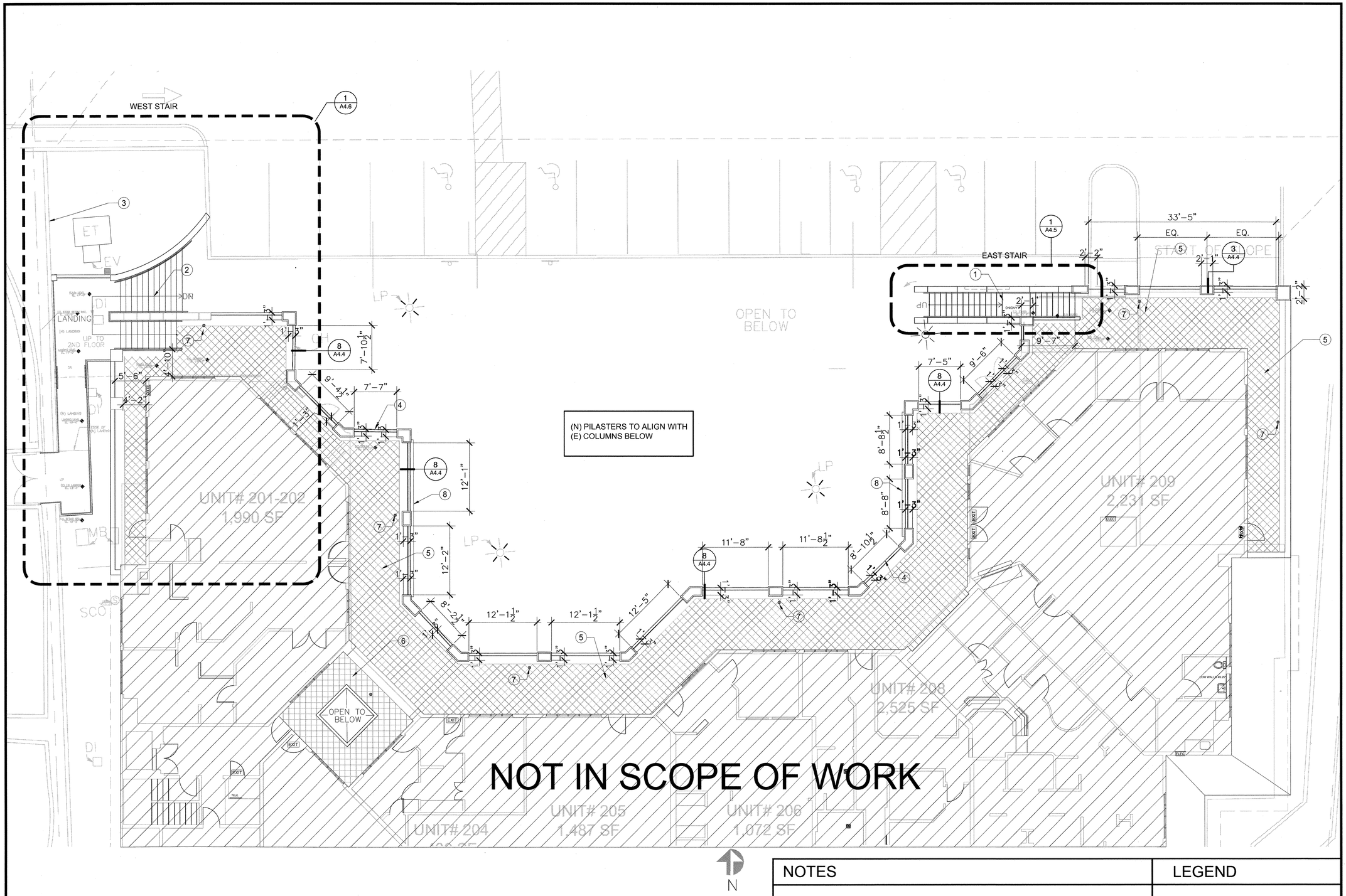

CONTRACTOR TO FIELD VERIFY ALL DIMENSIONS PRIOR TO RAILING FABRICATION.

NOTES

KEYNOTES:

KEYNOTES ARE REFERENCED ON THE DRAWING WITH THIS SYMBOL:

1. (N) EAST STAIRS
2. (N) WEST STAIRS, SEE PLAN.
3. (N) MANSION SIGN UNDER SEPARATE PERMIT
4. (N) RAILS. SEE ELEVATIONS
5. (N) FLOOR FINISH. SEE SCHEDULE.
6. (E) TILE FLOOR TO REMAIN
7. (E) DRAIN
8. (N) RAIN GUTTER

LEGEND

(E) WALL TO BE REMOVED

(E) WALL TO REMAIN

SECOND FLOOR PROPOSED PLAN

SCALE: 1/8"=1'-0" (1)

TRACE
Design and Development
18301 Von Karman Ave. Suite 850
Irvine, CA 92612 TEL. 949-221-1183

CAPISTRANO COLLECTION

27184 ORTEGA HWY.
S. J. CAPISTRANO, CA. 92675

THIS DRAWING IS AN INSTRUMENT OF SERVICE, IS THE PROPERTY OF THE ARCHITECT AND MAY NOT BE REPRODUCED WITHOUT THE ARCHITECT'S PERMISSION AND UNLESS THE REPRODUCTION CARRIES THE ARCHITECT'S NAME. ALL DESIGN AND OTHER INFORMATION SHOWN ON THE DRAWING ARE FOR USE ON THE SPECIFIED PROJECT ONLY AND SHALL NOT BE USED OTHERWISE WITHOUT WRITTEN PERMISSION FROM THE ARCHITECT

CLIENT:

FORTUS PROPERTY GROUP

NOTES:

MECHANICAL, ELECTRICAL, AND PLUMBING PERMITS TO BE PULLED SEPARATELY

APPROVALS:

KEY PLAN:

NO.	REVISION	DATE

SHEET TITLE

SECOND FLOOR PROPOSED PLAN

JOB NO.	DATE	SCALE
201103	12.12.12	

SHEET NO.

A-2.0

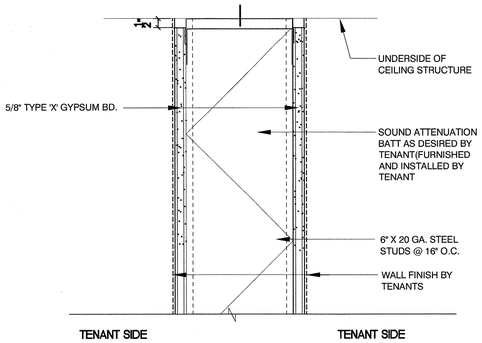

A AT TOP CONNECTION

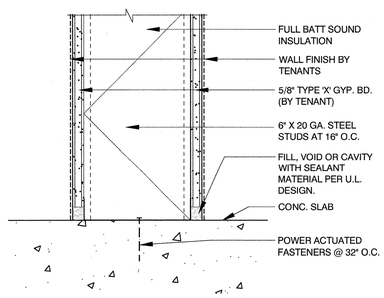

B AT BOT. CONNECTION

TYP DEMISING PARTITION(1-HR RATED) | SCALE: 3"=1'-0" | 5

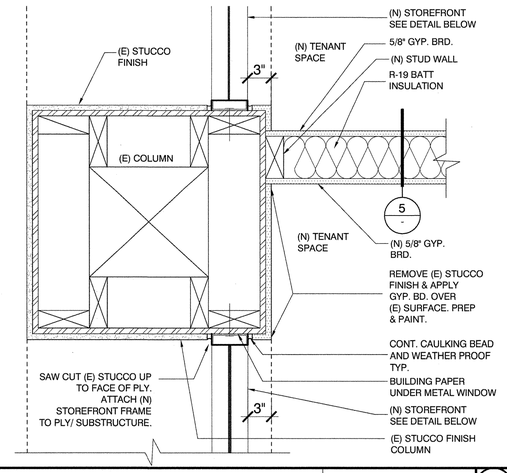

TYP. STOREFRONT DETAIL | SCALE: 1 1/2"=1'-0" | 4

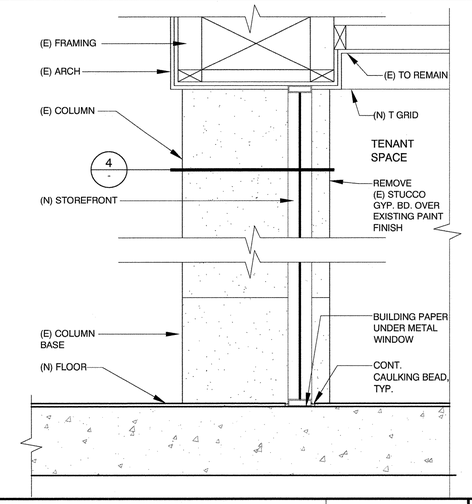

STOREFRONT DETAIL | SCALE: 1"=1'-0" | 3

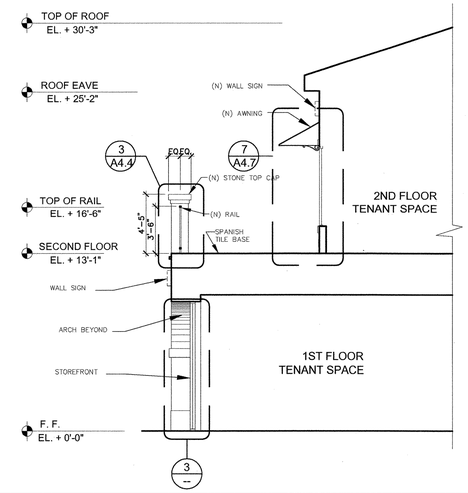

BUILDING SECTION | SCALE: 3/16"=1'-0" | 2

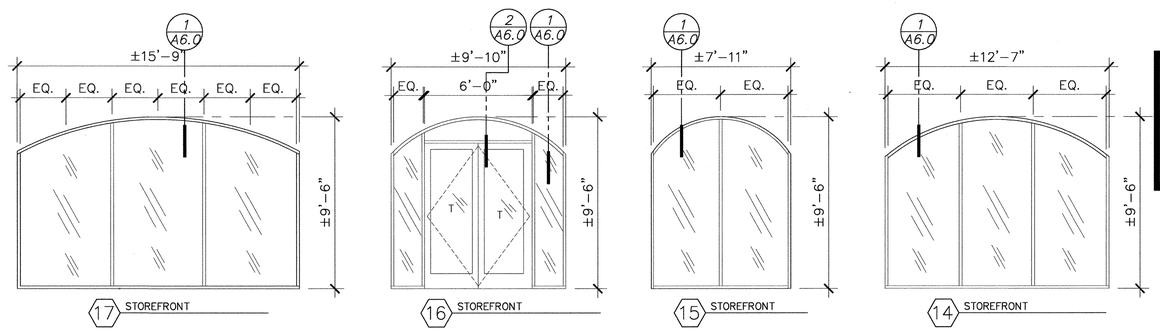

NOTE: ALL ROUGH OPENINGS DIMENSIONS MUST BE FIELD VERIFIED PRIOR TO FABRICATION.

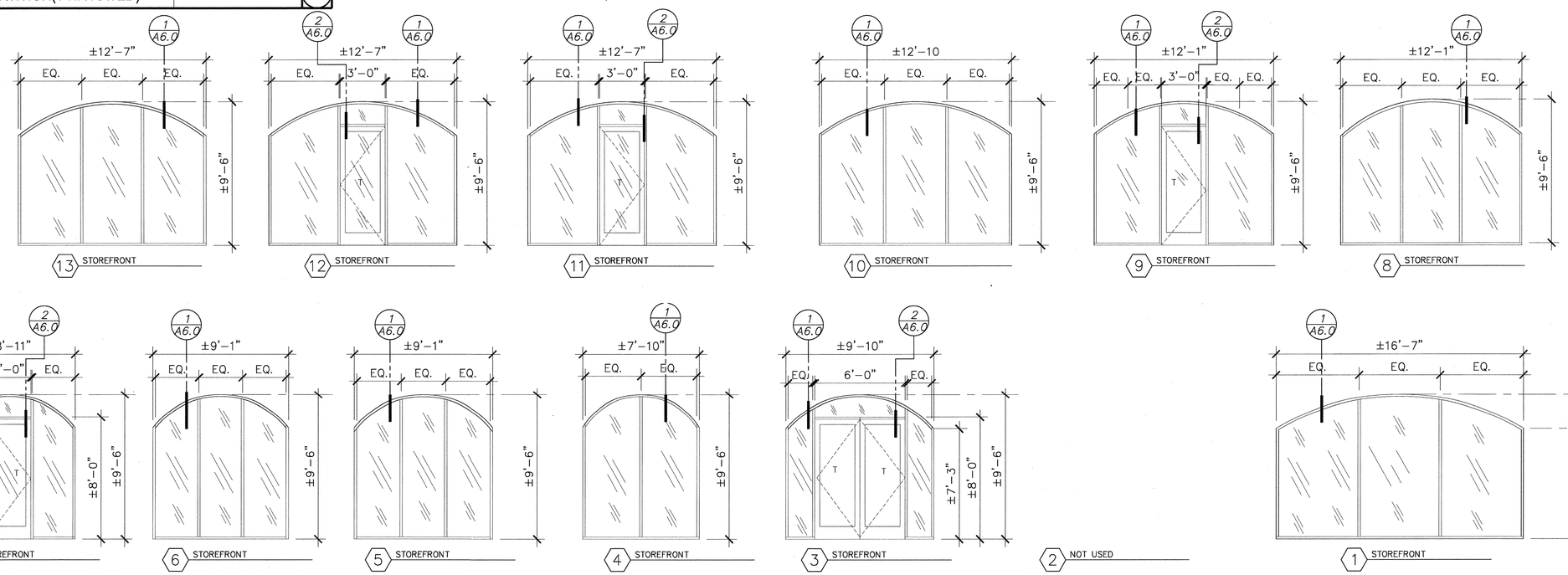

STOREFRONT ELEVATIONS | SCALE: 1/4"=1'-0" | 1

TRACE
Design and Development
18301 Von Karman Ave. Suite 850
Irvine, CA 92612 TEL. 949-221-1183

CAPISTRANO COLLECTION

27184 ORTEGA HWY.
S. J. CAPISTRANO, CA. 92675

THIS DRAWING IS AN INSTRUMENT OF SERVICE, IS THE PROPERTY OF THE ARCHITECT AND MAY NOT BE REPRODUCED WITHOUT THE ARCHITECT'S PERMISSION AND UNLESS THE REPRODUCTION CARRIES THE ARCHITECT'S NAME. ALL DESIGN AND OTHER INFORMATION SHOWN ON THE DRAWING ARE FOR USE ON THE SPECIFIED PROJECT ONLY AND SHALL NOT BE USED OTHERWISE WITHOUT WRITTEN PERMISSION FROM THE ARCHITECT

CLIENT:

FORTUS PROPERTY GROUP

NOTES:

MECHANICAL, ELECTRICAL, AND PLUMBING PERMITS TO BE PULLED SEPARATELY

APPROVALS:

KEY PLAN:

NO.	REVISION	DATE

SHEET TITLE

STOREFRONT

JOB NO.	DATE	SCALE
201103 201124	12.12.12 06.19.14	N.T.S.

SHEET NO.

A-3.0

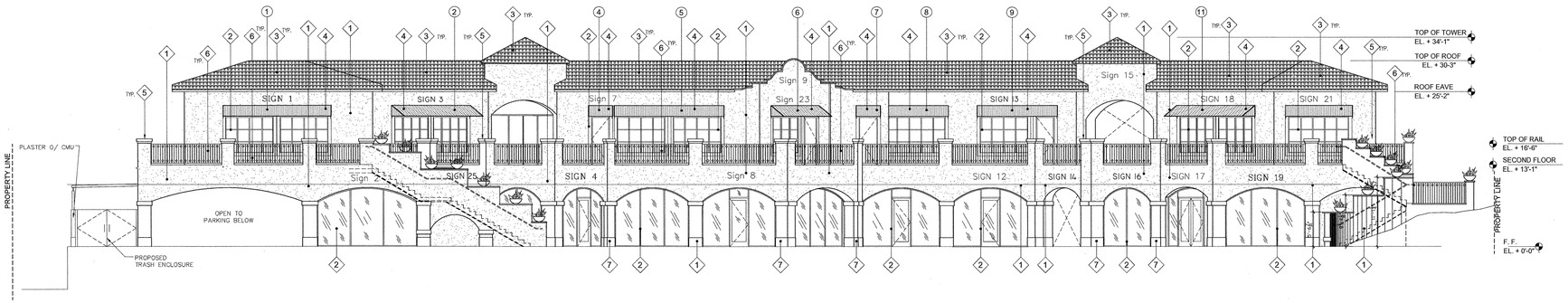

PROPOSED MAIN ELEVATION - SOUTH

SCALE: 3/32"=1'-0" (3)

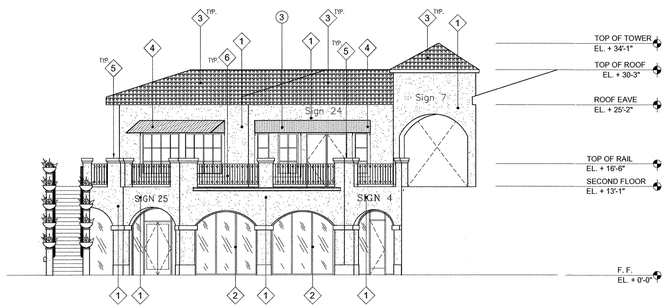

PROPOSED EAST ELEVATION - INTERIOR COURT YARD

SCALE: 3/32"=1'-0" (2)

PROPOSED WEST ELEVATION - INTERIOR COURT YARD

SCALE: 3/32"=1'-0" (1)

FINISHES

1. LA HABRA STUCCO - SILVERADO 820
2. PAINT- BENJAMIN MOORE - CENTRAL PARK # 431
3. (E) CLAY ROOF TILE
4. CANVAS CANOPY-COLOR TBD.
5. SEPULVEDA - CANTERA STONE CAP "CORCHO"
6. PAINT-TOPE GRAY RAILING
7. PATCH AND REPAIR AS NECESSARY TO MATCH EXISTING.

AWNING LENGTH

1. 17'-8⅜"
2. 17'-8¾"
3. 17'-3⅞"
4. 4'-0"
5. 19'-1⅛"
6. 10'-1½"
7. 4'-0"
8. 9'-9½"
9. 13'-2⅜"
10. 22'-2⅛"
11. 17'-8½"
11. 8'-8½"

NOTES

SIGNAGE UNDER SEPARATE PERMIT

TRACE
Design and Development
18301 Von Karman Ave. Suite 850
Irvine, CA 92612 TEL. 949-221-1183

CAPISTRANO COLLECTION

27184 ORTEGA HWY.
S. J. CAPISTRANO, CA. 92675

THIS DRAWING IS AN INSTRUMENT OF SERVICE, IS THE PROPERTY OF THE ARCHITECT AND MAY NOT BE REPRODUCED WITHOUT THE ARCHITECT'S PERMISSION AND UNLESS THE REPRODUCTION CARRIES THE ARCHITECT'S NAME. ALL DESIGN AND OTHER INFORMATION SHOWN ON THE DRAWING ARE FOR USE ON THE SPECIFIED PROJECT ONLY AND SHALL NOT BE USED OTHERWISE WITHOUT WRITTEN PERMISSION FROM THE ARCHITECT

CLIENT:

FORTUS PROPERTY GROUP

NOTES:

MECHANICAL, ELECTRICAL, AND PLUMBING PERMITS TO BE PULLED SEPARATELY

APPROVALS:

KEY PLAN:

NO.	REVISION	DATE

SHEET TITLE

PROPOSED ELEVATIONS

JOB NO.	DATE	SCALE
201103	12.12.12	

SHEET NO.

A-4.0

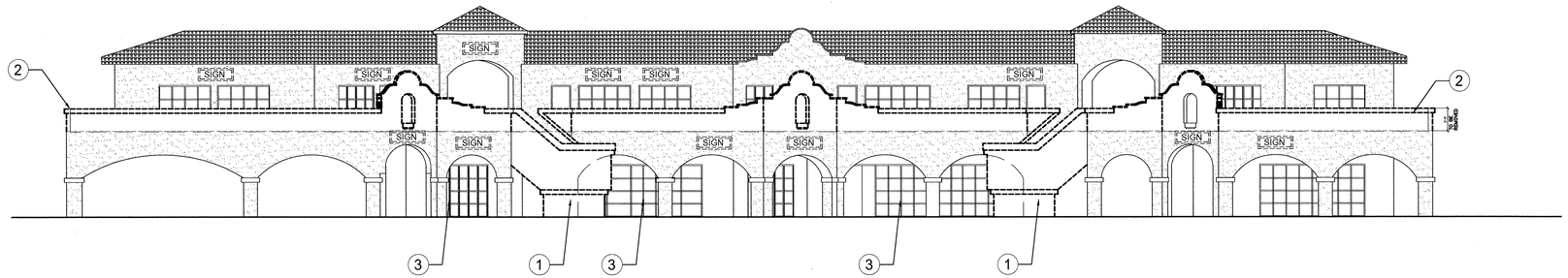

EXISTING MAIN ELEVATION - SOUTH

SCALE: 3/32"=1'-0" (3)

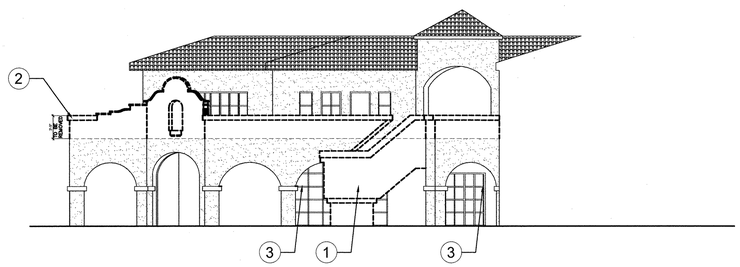

EXISTING EAST ELEVATION - INTERIOR COURT YARD

SCALE: 3/32"=1'-0" (2)

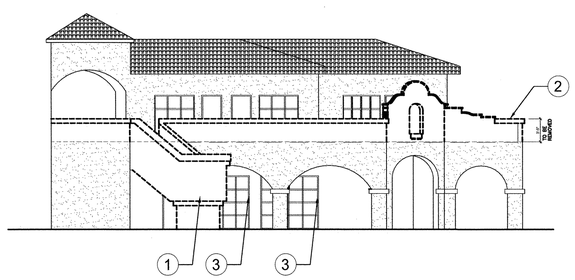

EXISTING WEST ELEVATION - INTERIOR COURT YARD

SCALE: 3/32"=1'-0" (1)

NOTE: TENANTS TO HAVE FULL ACCESS DURING CONSTRUCTION.
NEW STOREFRONT TO BE IN PLACE PRIOR TO DEMOLITION OF EXISTING STOREFRONT

DEMOLITION NOTES

KEYNOTES ARE REFERENCED ON THE DRAWING WITH THIS SYMBOL:

1. COMPLETELY REMOVE EXISTING STAIR, TYP.
2. REMOVE HANDRAIL AND ARCHITECTURAL FEATURES TO THE DIMENSION LINE SHOWN. LEAVE EXPOSED FRAME AND PREPARE TO RECEIVE NEW FRAMING AS PER NEW DESIGN..
3. REMOVE STOREFRONT AT 1ST FLOOR. REFER TO PLANS FOR MORE DETAILS

LEGEND

(E) TO BE REMOVED

(E) TO REMAIN

TRACE
Design and Development
18301 Von Karman Ave. Suite 850
Irvine, CA 92612 TEL. 949-221-1183

CAPISTRANO COLLECTION

27184 ORTEGA HWY.
S. J. CAPISTRANO, CA. 92675

THIS DRAWING IS AN INSTRUMENT OF SERVICE, IS THE PROPERTY OF THE ARCHITECT AND MAY NOT BE REPRODUCED WITHOUT THE ARCHITECT'S PERMISSION AND UNLESS THE REPRODUCTION CARRIES THE ARCHITECT'S NAME. ALL DESIGN AND OTHER INFORMATION SHOWN ON THE DRAWING ARE FOR USE ON THE SPECIFIED PROJECT ONLY AND SHALL NOT BE USED OTHERWISE WITHOUT WRITTEN PERMISSION FROM THE ARCHITECT

CLIENT:

FORTUS PROPERTY GROUP

NOTES:

MECHANICAL, ELECTRICAL, AND PLUMBING PERMITS TO BE PULLED SEPARATELY

APPROVALS:

KEY PLAN:

NO.	REVISION	DATE

SHEET TITLE

EXISTING - DEMO ELEVATIONS

JOB NO.	DATE	SCALE
201103	12.12.12	

SHEET NO.

A-4.01

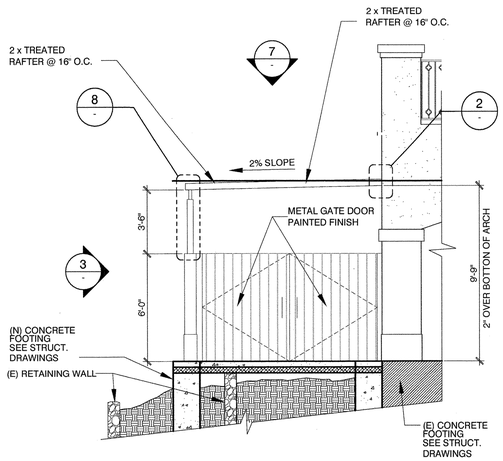

TRASH ENCLOSURE ELEVATION | SCALE: 1/4"=1'-0" | 11

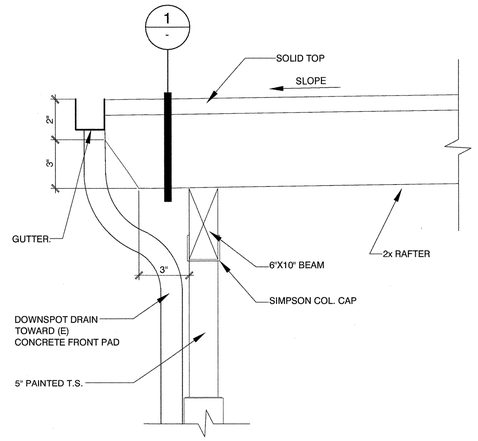

GUTTER DETAIL | SCALE: 3"=1'-0" | 8

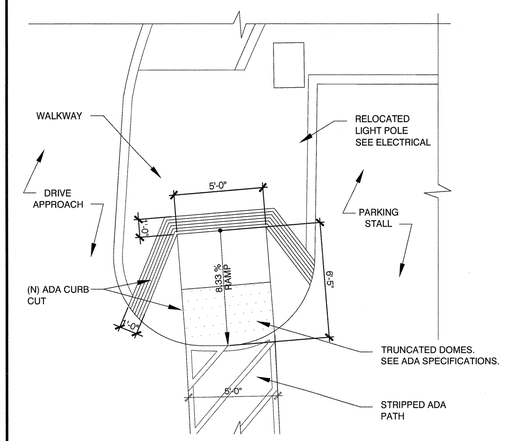

CURB CUT | SCALE: 1/4"=1'-0" | 6

SCALE: 1/4"=1'-0" | 4

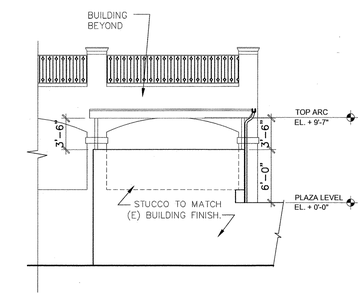

TRASH ENCLOSURE ELEVATION | SCALE: 1/8"=1'-0" | 3

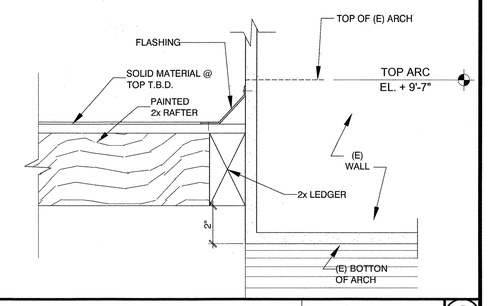

TRASH ENCLOSURE DETAIL | SCALE:3"=1'-0" | 2

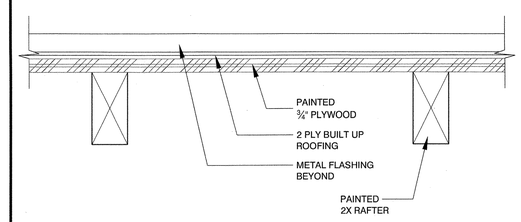

DETAIL | SCALE: 3"=1'-0" | 1

SCALE: 1/4"=1'-0" | 9

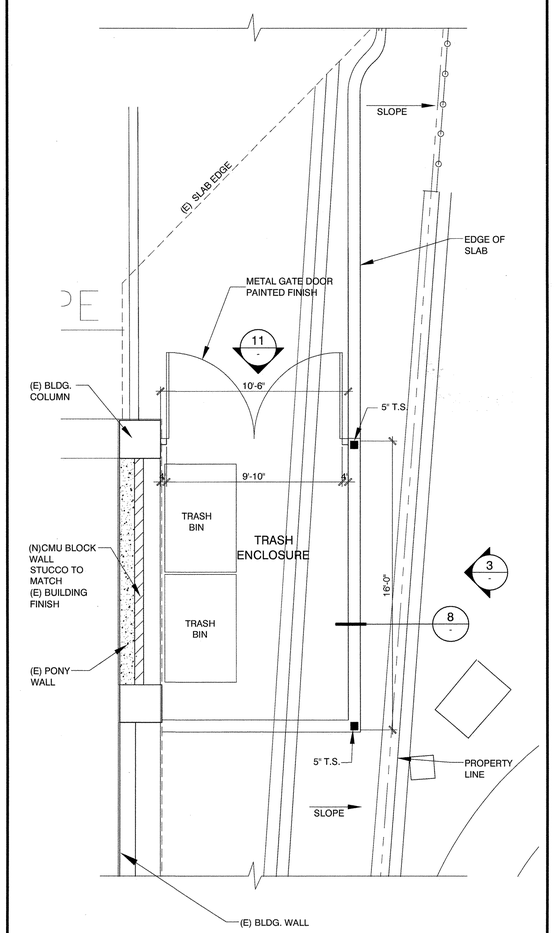

TRASH ENCLOSURE PLAN | SCALE: 1/4"=1'-0" | 7

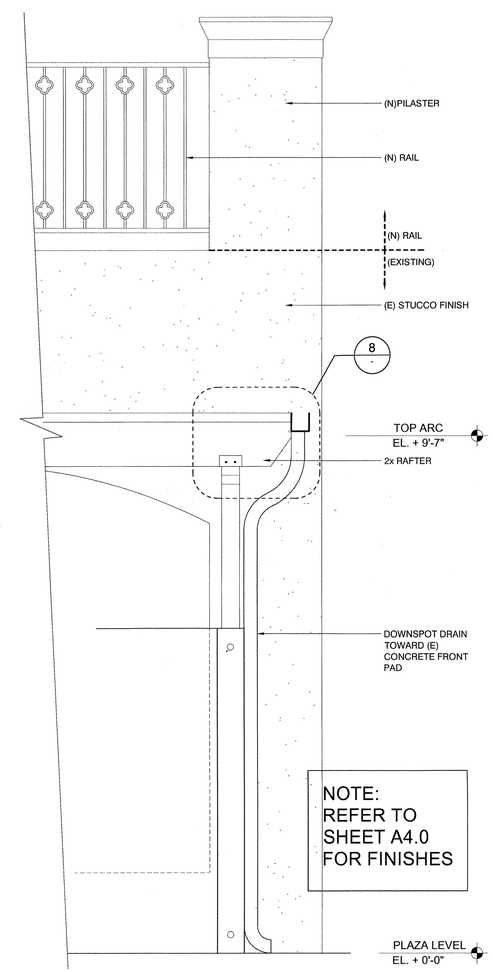

NOTE:
REFER TO
SHEET A4.0
FOR FINISHES

TRASH ENCLOSURE SECTION | SCALE: 1/4"=1'-0" | 5

TRACE
Design and Development
18301 Von Karman Ave. Suite 850
Irvine, CA 92612 TEL. 949-221-1183

CAPISTRANO COLLECTION

27184 ORTEGA HWY.
S. J. CAPISTRANO, CA. 92675

THIS DRAWING IS AN INSTRUMENT OF SERVICE, IS THE PROPERTY OF THE ARCHITECT AND MAY NOT BE REPRODUCED WITHOUT THE ARCHITECT'S PERMISSION AND UNLESS THE REPRODUCTION CARRIES THE ARCHITECT'S NAME. ALL DESIGN AND OTHER INFORMATION SHOWN ON THE DRAWING ARE FOR USE ON THE SPECIFIED PROJECT ONLY AND SHALL NOT BE USED OTHERWISE WITHOUT WRITTEN PERMISSION FROM THE ARCHITECT.

CLIENT:

FORTUS
PROPERTY GROUP

NOTES:

MECHANICAL, ELECTRICAL, AND PLUMBING PERMITS TO BE PULLED SEPARATELY

APPROVALS:

KEY PLAN:

NO.	REVISION	DATE

SHEET TITLE

TRASH ENCLOSURE

JOB NO.	DATE	SCALE
201103	12.12.12	

SHEET NO.

A4.1

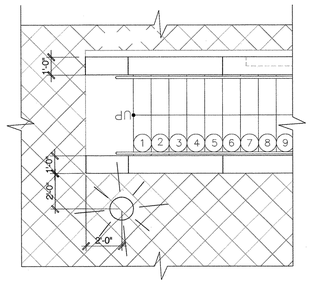

FLOORING @ STAIR | SCALE: 1/8"=1'-0" | 5

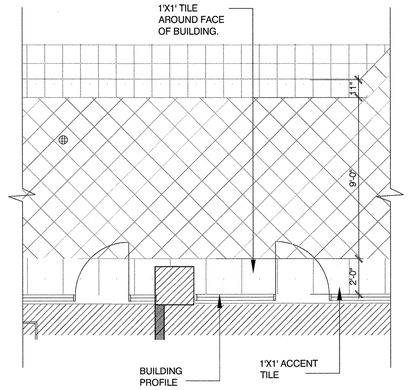

FLOORING | SCALE: 1/8"=1'-0" | 4

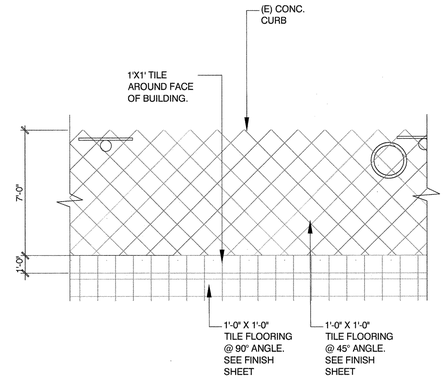

FLOORING | SCALE: 1/8"=1'-0" | 3

SCALE: 3"=1'-0" | 2

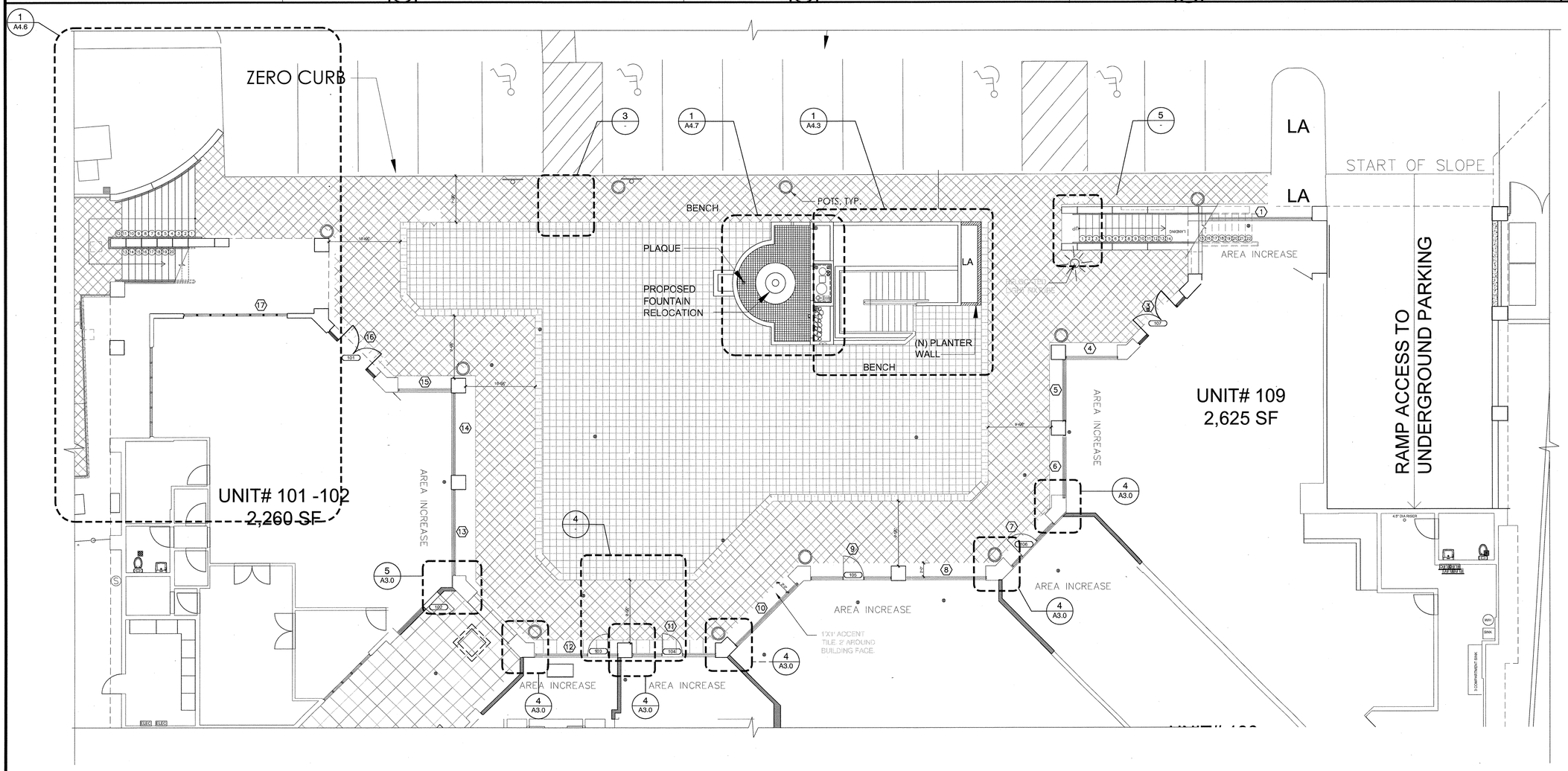

ENLARGED PLANS | SCALE: 1/8"=1'-0" | 1

TRACE
Design and Development
18301 Von Karman Ave. Suite 850
Irvine, CA 92612 TEL. 949-221-1183

CAPISTRANO COLLECTION

27184 ORTEGA HWY.
S. J. CAPISTRANO, CA. 92675

THIS DRAWING IS AN INSTRUMENT OF SERVICE, IS THE PROPERTY OF THE ARCHITECT AND MAY NOT BE REPRODUCED WITHOUT THE ARCHITECT'S PERMISSION AND UNLESS THE REPRODUCTION CARRIES THE ARCHITECT'S NAME. ALL DESIGN AND OTHER INFORMATION SHOWN ON THE DRAWING ARE FOR USE ON THE SPECIFIED PROJECT ONLY AND SHALL NOT BE USED OTHERWISE WITHOUT WRITTEN PERMISSION FROM THE ARCHITECT

CLIENT:

FORTUS
PROPERTY GROUP

NOTES:

MECHANICAL, ELECTRICAL, AND PLUMBING PERMITS TO BE PULLED SEPARATELY

APPROVALS:

KEY PLAN:

NO.	REVISION	DATE

SHEET TITLE

COURTYARD

JOB NO.	DATE	SCALE
201103	12.12.12	

SHEET NO.

A4.2

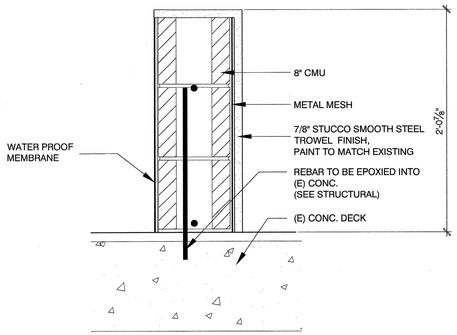

SCALE: 1/2"=1'-0" 8

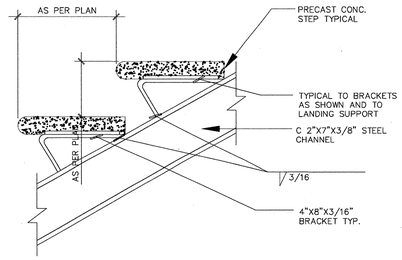

STAIR DETAIL SCALE: 1 1/2"=1'-0" 5

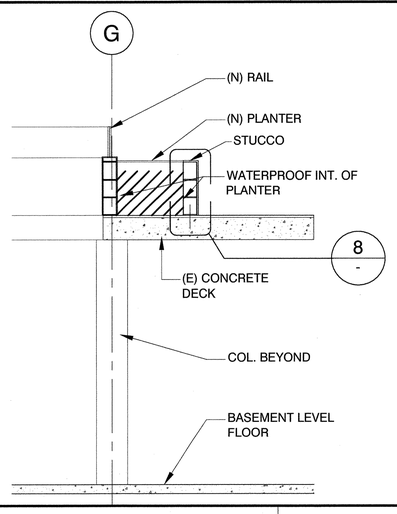

DETAIL SCALE: 3/8"=1'-0" 7

NOTE:
REFER TO SHOP DRAWINGS FOR DETAILS

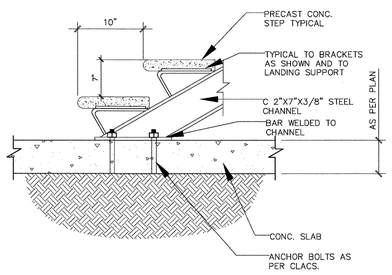

STAIR DETAIL SCALE: 1 1/2"=1'-0" 4

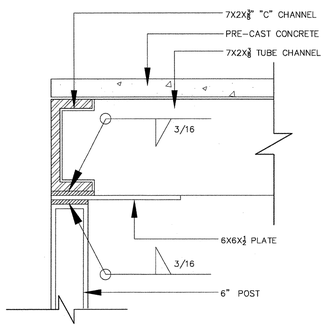

LANDING STAIR DETAIL SCALE: 1/2"=1'-0" 6

NOTE:
REFER TO SHOP DRAWINGS FOR DETAILS

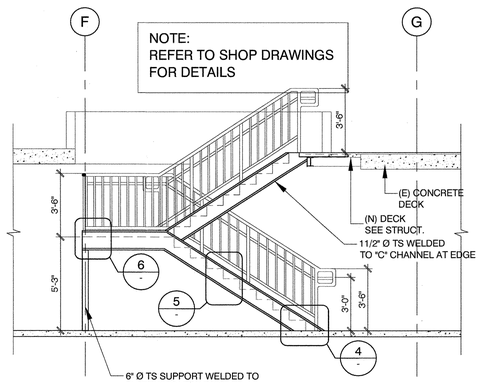

STAIR CONTRACTOR TO FIELD VERIFY HEIGHTS PRIOR TO FABRICATION.

STAIR PLAZA - SECTION SCALE: 1/4"=1'-0" 3

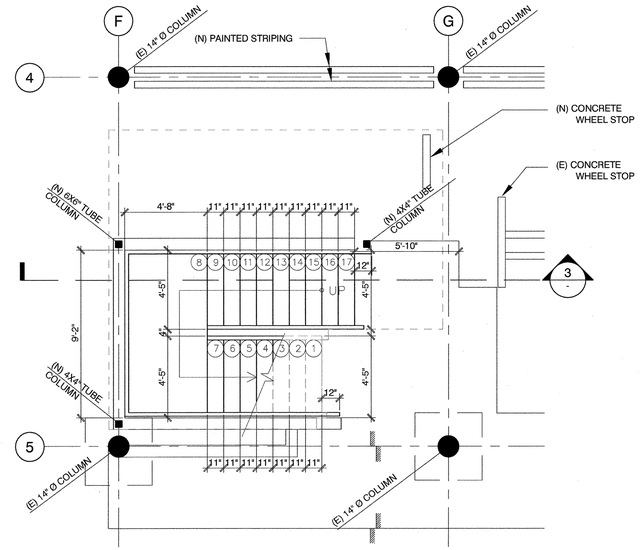

NOTE: REFER TO STRUCTURAL DRAWINGS

STAIR PLAZA - UNDERGROUND PARKING LEVEL SCALE: 1/4"=1'-0" 2

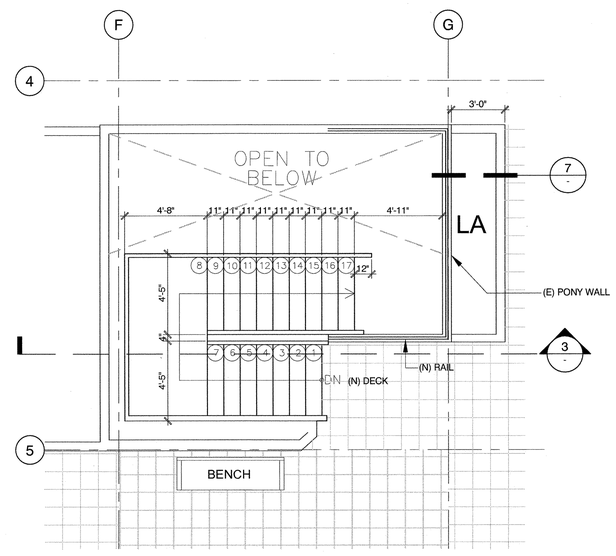

NOTE: REFER TO STRUCTURAL DRAWINGS

STAIR PLAZA - FIRST LEVEL SCALE: 1/4"=1'-0" 1

TRACE
Design and Development
18301 Von Karman Ave. Suite 850
Irvine, CA 92612 TEL. 949-221-1183

CAPISTRANO COLLECTION

27184 ORTEGA HWY.
S. J. CAPISTRANO, CA. 92675

THIS DRAWING IS AN INSTRUMENT OF SERVICE, IS THE PROPERTY OF THE ARCHITECT AND MAY NOT BE REPRODUCED WITHOUT THE ARCHITECT'S PERMISSION AND UNLESS THE REPRODUCTION CARRIES THE ARCHITECT'S NAME. ALL DESIGN AND OTHER INFORMATION SHOWN ON THE DRAWING ARE FOR USE ON THE SPECIFIED PROJECT ONLY AND SHALL NOT BE USED OTHERWISE WITHOUT WRITTEN PERMISSION FROM THE ARCHITECT

CLIENT:

FORTUS PROPERTY GROUP

NOTES:

MECHANICAL, ELECTRICAL, AND PLUMBING PERMITS TO BE PULLED SEPARATELY

APPROVALS:

KEY PLAN:

NO.	REVISION	DATE

SHEET TITLE

GARAGE STAIR DETAILS

JOB NO.	DATE	SCALE
201103	12.12.12	

SHEET NO.

A4.3

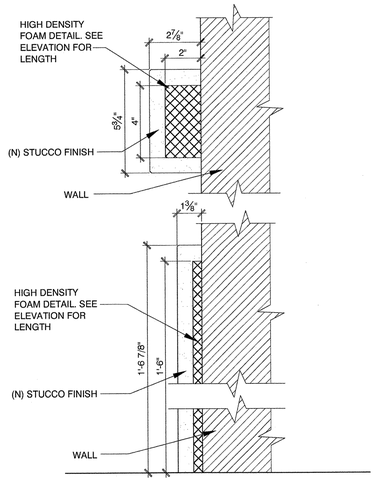

DETAIL | SCALE: 3"=1'-0" | 12

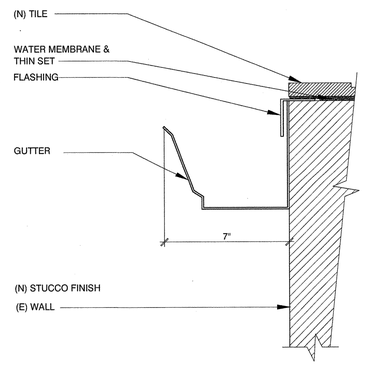

GUTTER DETAIL | SCALE: 3"=1'-0" | 9

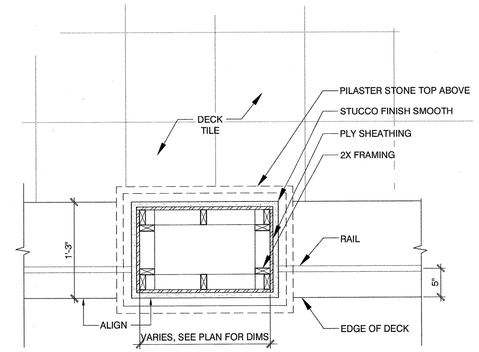

PILASTER PLAN | SCALE: 1"=1'-0" | 6

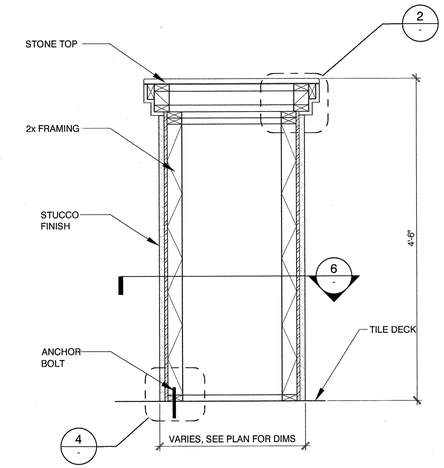

RAIL DETAIL | SCALE: 1"=1'-0" | 3

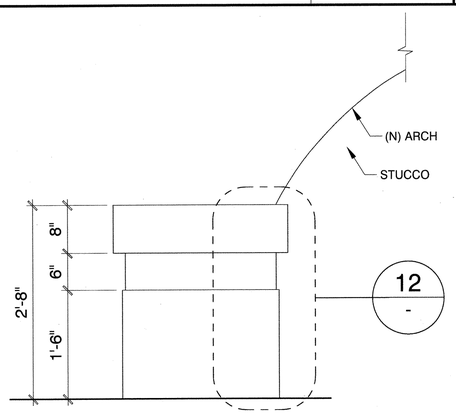

DETAIL | SCALE: 1"=1'-0" | 11

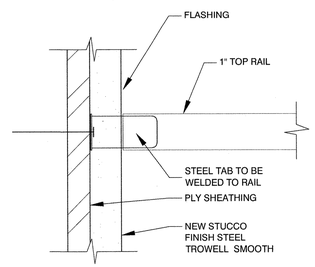

RAILING ATTACHMENT | SCALE: 3"=1'-0" | 8

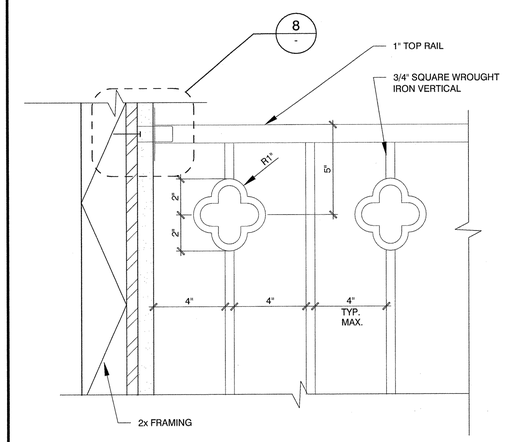

RAIL DETAIL | SCALE: 1 1/2"=1'-0" | 5

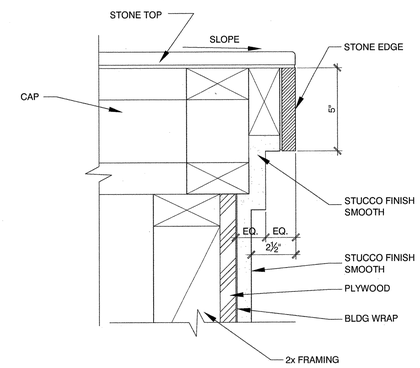

RAIL DETAIL | 2

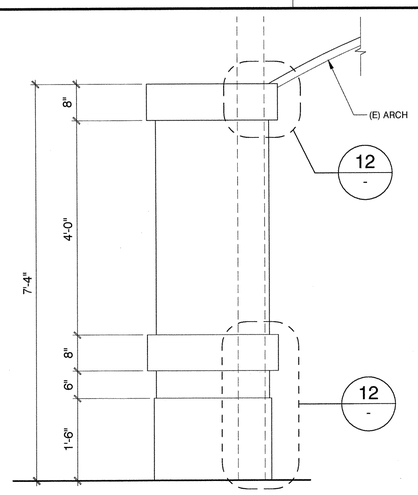

DETAIL | SCALE: 3/4"=1'-0" | 10

DETAIL | SCALE: 1/8"=1'-0" | 7

DETAIL | SCALE: 1/8"=1'-0" | 4

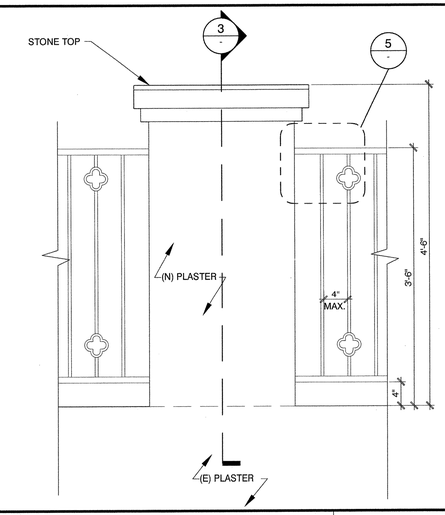

RAIL DETAIL | SCALE: 1"=1'-0" | 1

TRACE Design and Development
18301 Von Karman Ave. Suite 850
Irvine, CA 92612 TEL. 949-221-1183

CAPISTRANO COLLECTION

27184 ORTEGA HWY.
S. J. CAPISTRANO, CA. 92675

THIS DRAWING IS AN INSTRUMENT OF SERVICE, IS THE PROPERTY OF THE ARCHITECT AND MAY NOT BE REPRODUCED WITHOUT THE ARCHITECT'S PERMISSION AND UNLESS THE REPRODUCTION CARRIES THE ARCHITECT'S NAME. ALL DESIGN AND OTHER INFORMATION SHOWN ON THE DRAWING ARE FOR USE ON THE SPECIFIED PROJECT ONLY AND SHALL NOT BE USED OTHERWISE WITHOUT WRITTEN PERMISSION FROM THE ARCHITECT

CLIENT:

FORTUS PROPERTY GROUP

NOTES:

MECHANICAL, ELECTRICAL, AND PLUMBING PERMITS TO BE PULLED SEPARATELY

APPROVALS:

KEY PLAN:

NO.	REVISION	DATE

SHEET TITLE

SITE DETAILS

JOB NO.	DATE	SCALE
201103	12.12.12	

SHEET NO.

A4.4

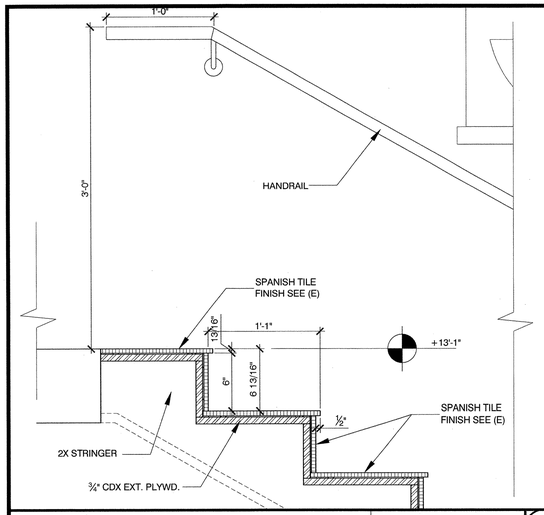

BUILDING EAST STAIR SECTION | SCALE: 1-1/2"=1'-0" | 6

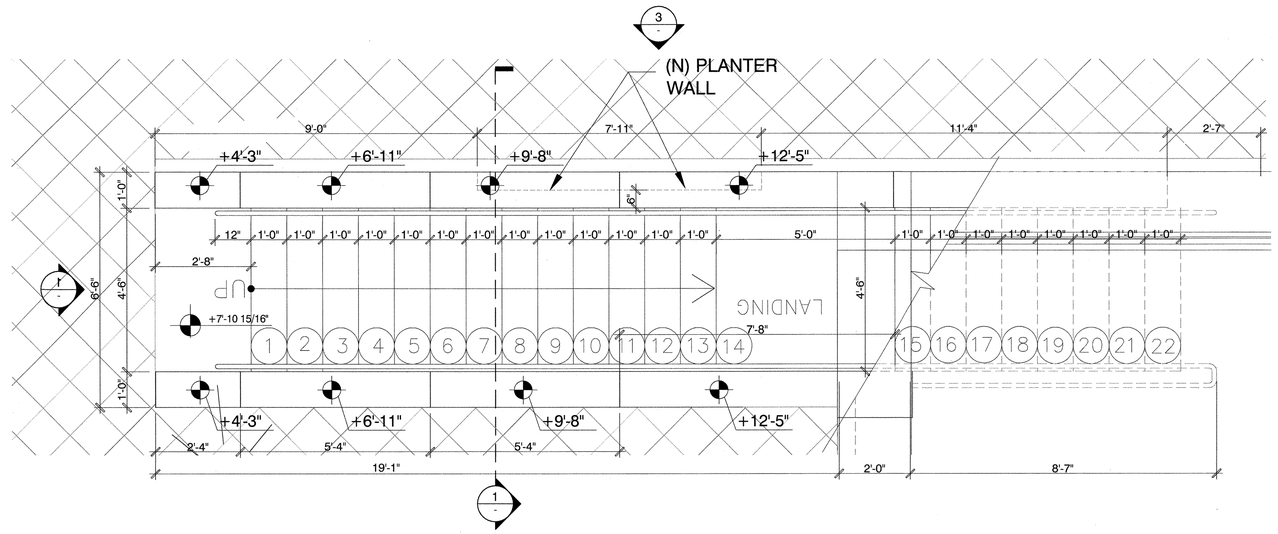

EAST STAIR - PLAN VIEW | SCALE: 1/2"=1'-0" | 2

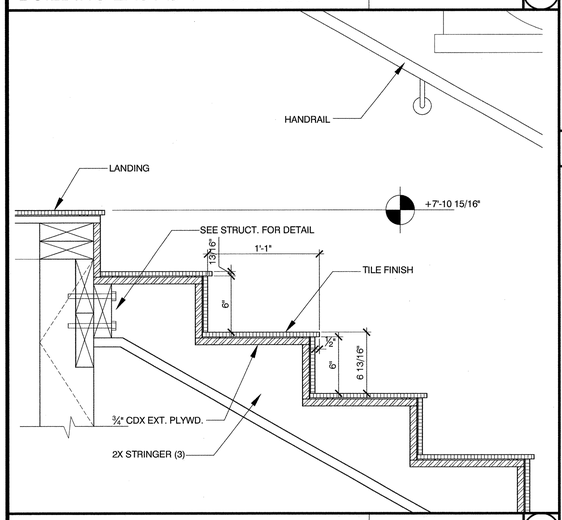

BUILDING EAST STAIR SECTION | SCALE: 1-1/2"=1'-0" | 5

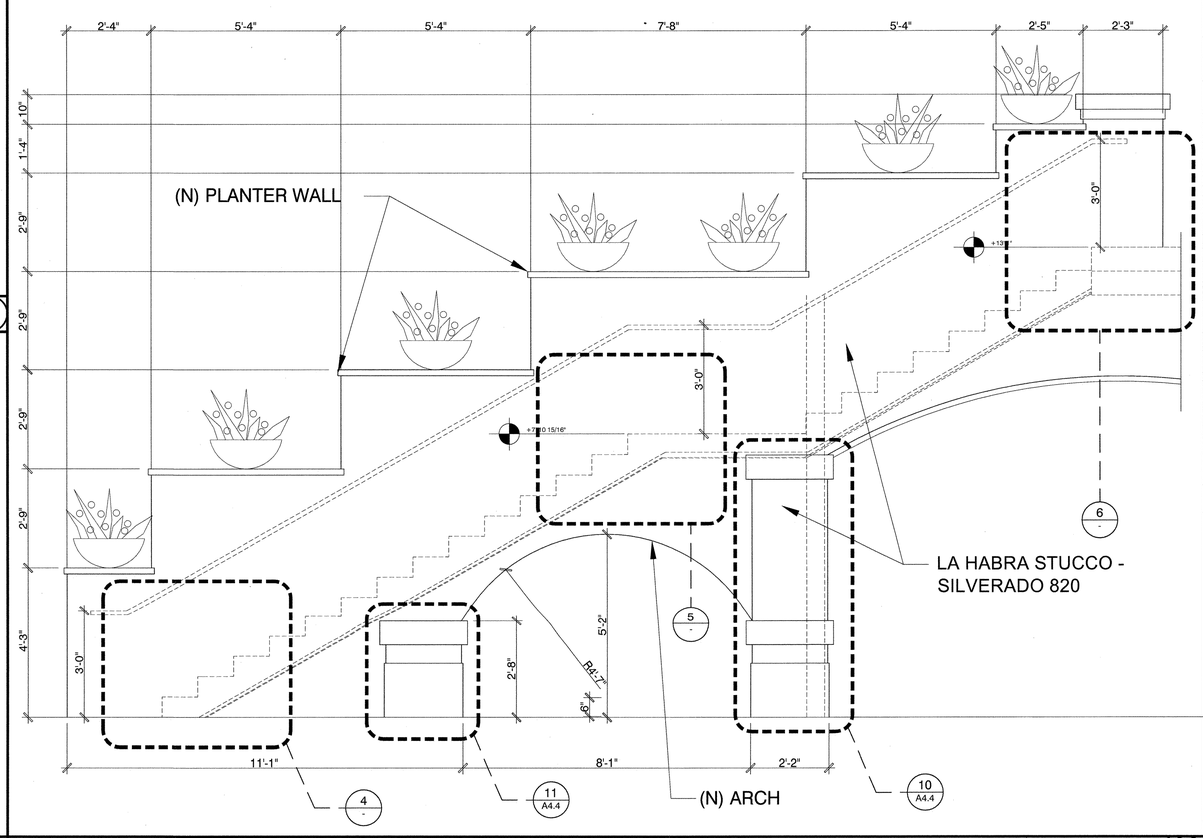

EAST STAIR - STAIR ELEVATION | SCALE: 1/2"=1'-0" | 3

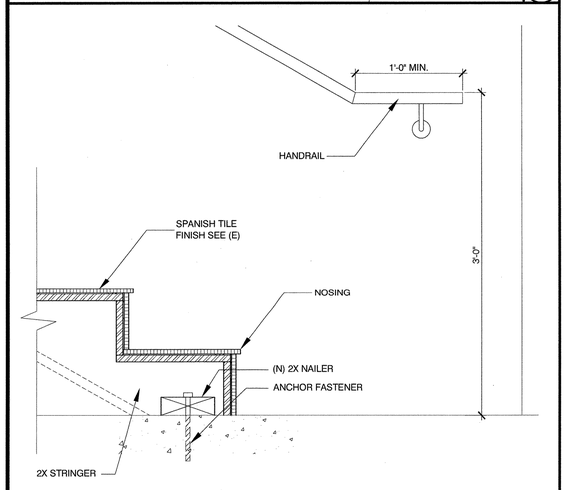

BUILDING EAST STAIR SECTION | SCALE: 1-1/2"=1'-0" | 4

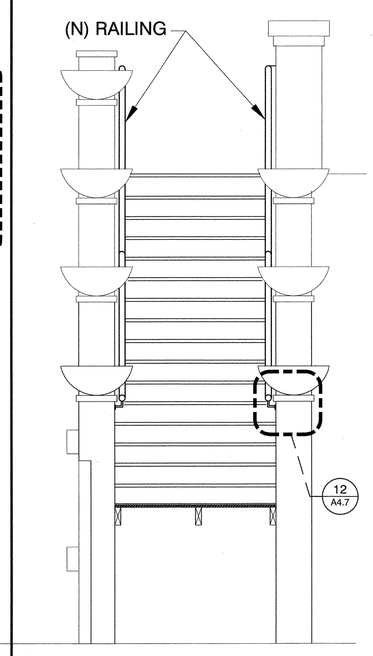

BUILDING EAST STAIR | SCALE: 1/2"=1'-0" | 1

TRACE
Design and Development
18301 Von Karman Ave. Suite 850
Irvine, CA 92612 TEL. 949-221-1183

CAPISTRANO COLLECTION

27184 ORTEGA HWY.
S. J. CAPISTRANO, CA. 92675

THIS DRAWING IS AN INSTRUMENT OF SERVICE, IS THE PROPERTY OF THE ARCHITECT AND MAY NOT BE REPRODUCED WITHOUT THE ARCHITECT'S PERMISSION AND UNLESS THE REPRODUCTION CARRIES THE ARCHITECT'S NAME. ALL DESIGN AND OTHER INFORMATION SHOWN ON THE DRAWING ARE FOR USE ON THE SPECIFIED PROJECT ONLY AND SHALL NOT BE USED OTHERWISE WITHOUT WRITTEN PERMISSION FROM THE ARCHITECT

CLIENT:

FORTUS
PROPERTY GROUP

NOTES:

MECHANICAL, ELECTRICAL, AND PLUMBING PERMITS TO BE PULLED SEPARATELY

APPROVALS:

KEY PLAN:

NO.	REVISION	DATE

SHEET TITLE

EAST STAIRCASE

JOB NO.	DATE	SCALE
201103	12.12.12	

SHEET NO.

A4.5

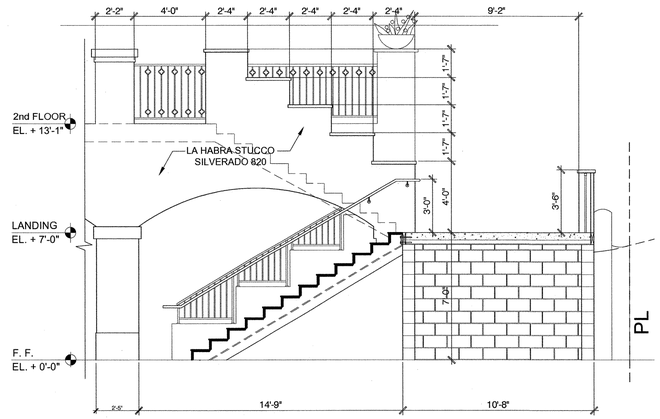

WEST STAIR SECTION — SCALE: 1/4"=1'-0" (5)

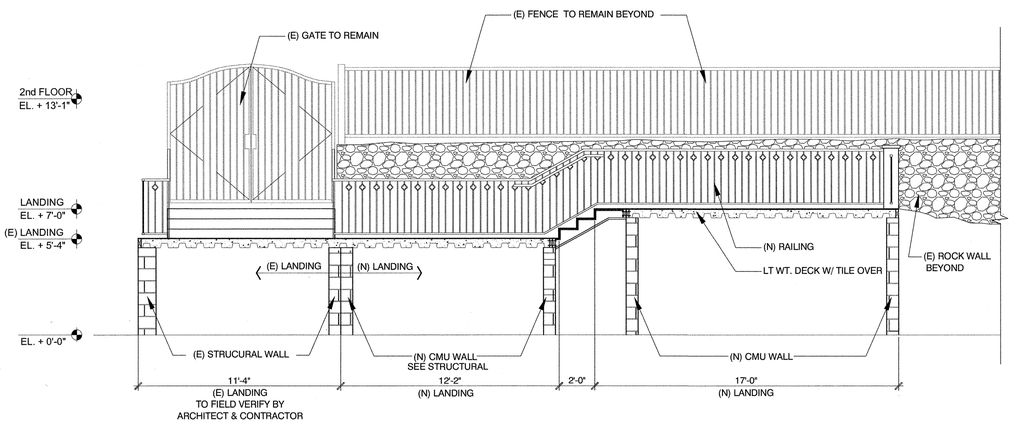

PATH TO MANSION SECTION — SCALE: 1/4"=1'-0" (4)

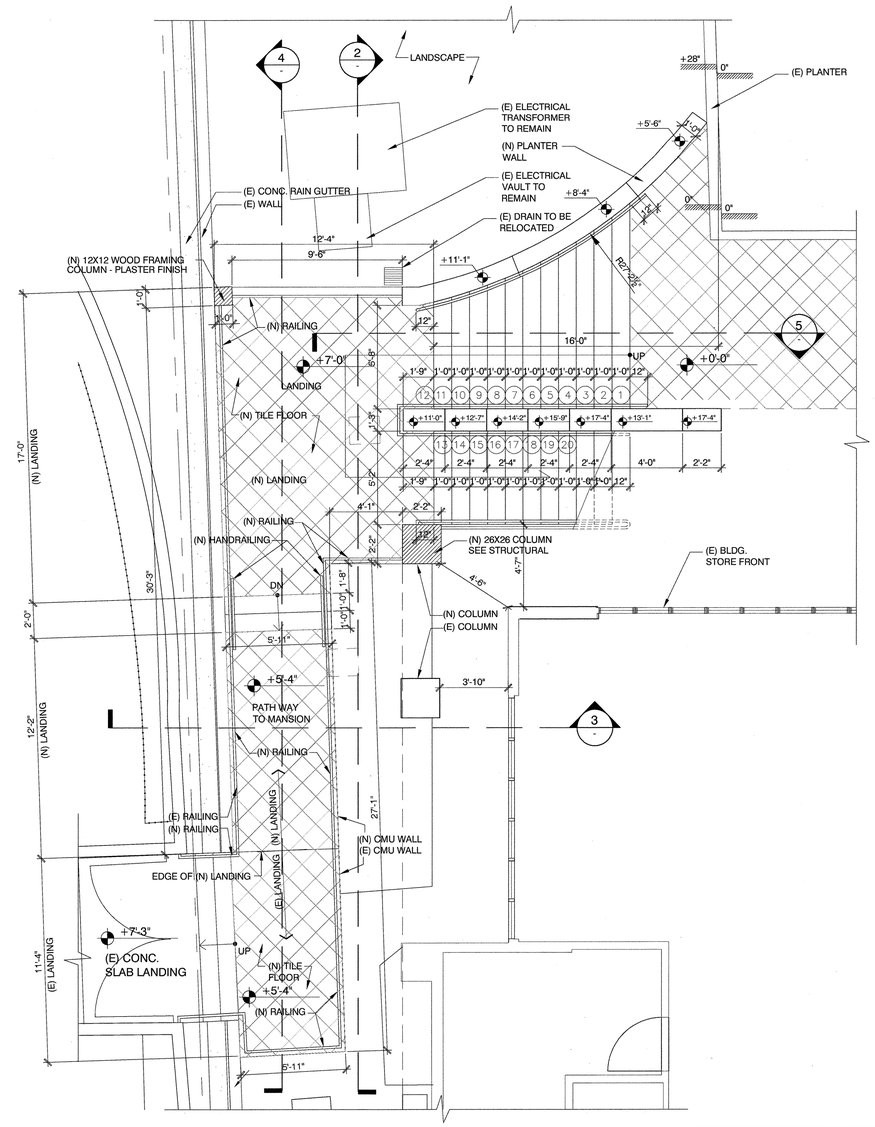

WEST STAIR / PATH TO MANSION - PLAN VIEW — SCALE: 1/4"=1'-0" (1)

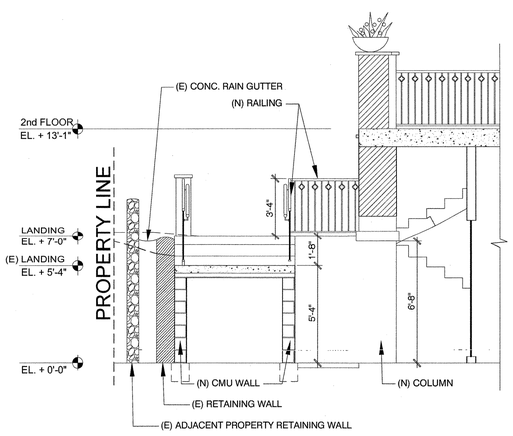

PATH TO MANSION SECTION — SCALE: 1/4"=1'-0" (3)

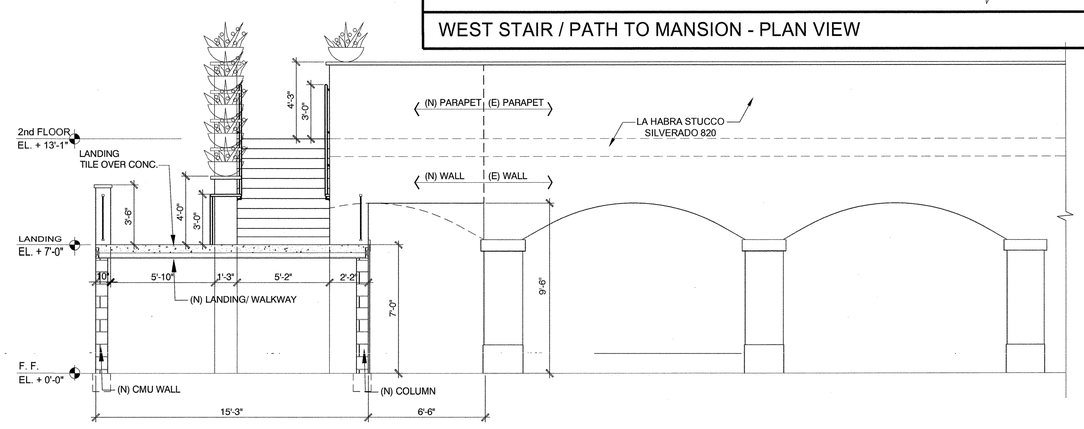

WEST STAIR SECTION — SCALE: 1/4"=1'-0" (2)

TRACE
Design and Development
18301 Von Karman Ave. Suite 850
Irvine, CA 92612 TEL. 949-221-1183

CAPISTRANO COLLECTION

27184 ORTEGA HWY.
S. J. CAPISTRANO, CA. 92675

THIS DRAWING IS AN INSTRUMENT OF SERVICE, IS THE PROPERTY OF THE ARCHITECT AND MAY NOT BE REPRODUCED WITHOUT THE ARCHITECT'S PERMISSION AND UNLESS THE REPRODUCTION CARRIES THE ARCHITECT'S NAME. ALL DESIGN AND OTHER INFORMATION SHOWN ON THE DRAWING ARE FOR USE ON THE SPECIFIED PROJECT ONLY AND SHALL NOT BE USED OTHERWISE WITHOUT WRITTEN PERMISSION FROM THE ARCHITECT

CLIENT:

FORTUS PROPERTY GROUP

NOTES:

MECHANICAL, ELECTRICAL, AND PLUMBING PERMITS TO BE PULLED SEPARATELY

APPROVALS:

KEY PLAN:

NO.	REVISION	DATE

SHEET TITLE

WEST STAIR CASE

JOB NO.	DATE	SCALE
201103	12.12.12	

SHEET NO.

A4.6

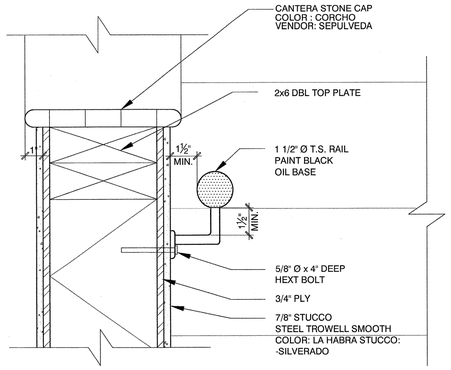

STAIR FRAMING DETAIL | SCALE: 3"=1'-0" | 12

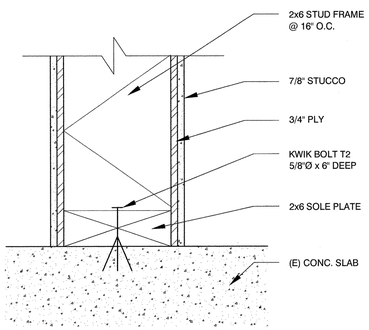

STAIR FRAMING DETAIL | SCALE: 3"=1'-0" | 11

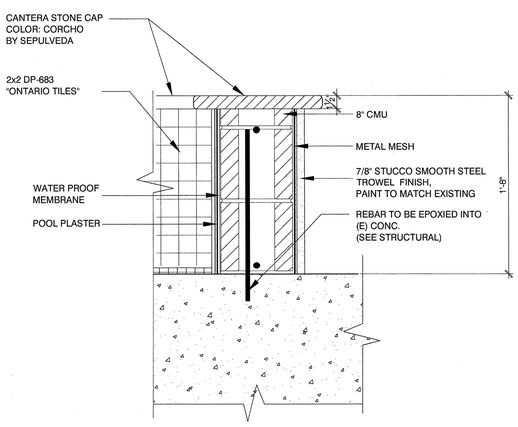

FOUNTAIN DETAIL | SCALE: 1 1/2"=1'-0" | 10

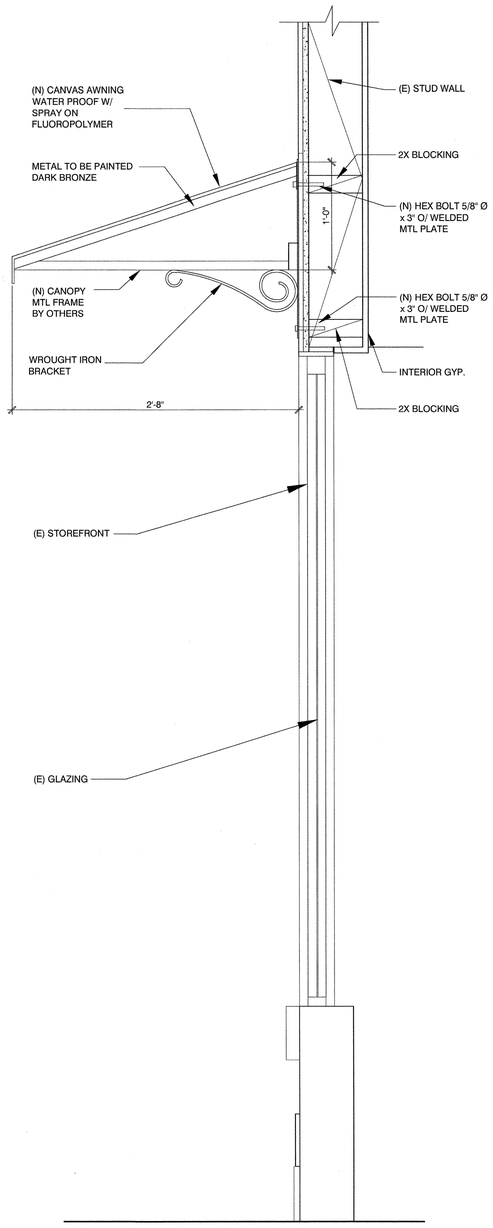

CANOPY @ SECOND FLOOR | SCALE: 1-½"=1'-0" | 7

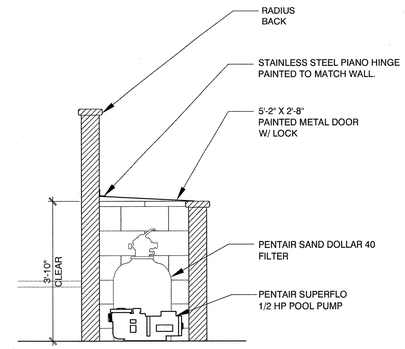

FOUNTAIN DETAIL | SCALE: 1/4"=1'-0" | 6

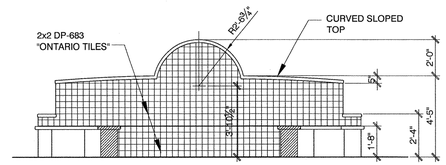

(N) FOUNTAIN NEEDS TO BE
6" BELOW (E) BACK LOW
WALL

FOUNTAIN SECTION | SCALE: 1/4"=1'-0" | 3

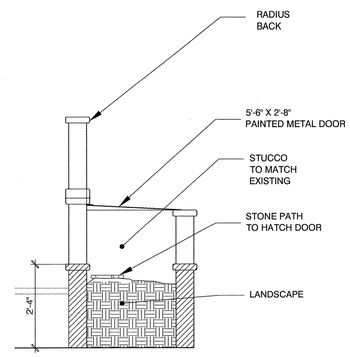

FOUNTAIN DETAIL | SCALE: 1/4"=1'-0" | 5

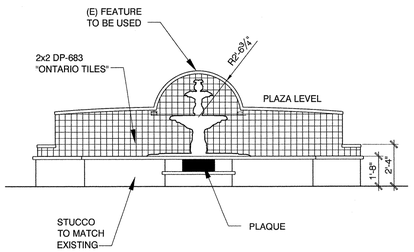

FOUNTAIN ELEVATION | SCALE: 1/4"=1'-0" | 2

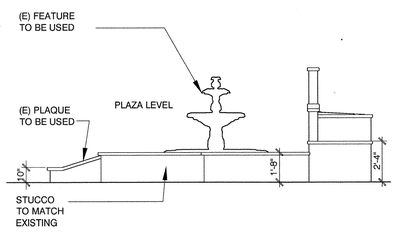

FOUNTAIN ELEVATION | SCALE: 1/4"=1'-0" | 4

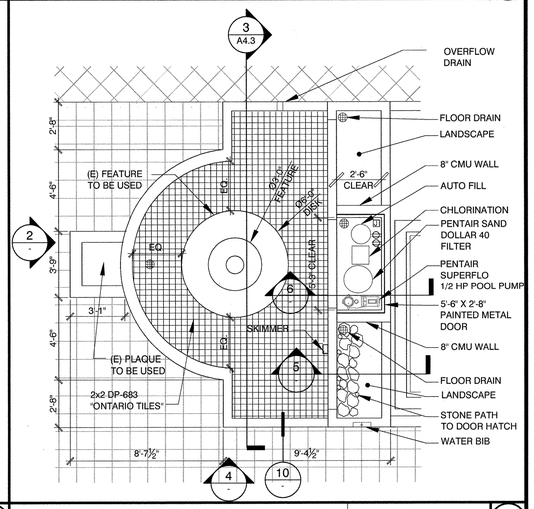

FOUNTAIN PLAN | SCALE: 1/4"=1'-0" | 1

TRACE
Design and Development
18301 Von Karman Ave. Suite 850
Irvine, CA 92612 TEL. 949-221-1183

CAPISTRANO COLLECTION

27184 ORTEGA HWY.
S. J. CAPISTRANO, CA. 92675

THIS DRAWING IS AN INSTRUMENT OF SERVICE, IS THE PROPERTY OF THE ARCHITECT AND MAY NOT BE REPRODUCED WITHOUT THE ARCHITECT'S PERMISSION AND UNLESS THE REPRODUCTION CARRIES THE ARCHITECT'S NAME. ALL DESIGN AND OTHER INFORMATION SHOWN ON THE DRAWING ARE FOR USE ON THE SPECIFIED PROJECT ONLY AND SHALL NOT BE USED OTHERWISE WITHOUT WRITTEN PERMISSION FROM THE ARCHITECT.

CLIENT:

FORTUS
PROPERTY GROUP

NOTES:

MECHANICAL, ELECTRICAL, AND PLUMBING PERMITS TO BE PULLED SEPARATELY

APPROVALS:

KEY PLAN:

NO.	REVISION	DATE

SHEET TITLE

DETAILS

JOB NO.	DATE	SCALE
201103	12.12.12	

SHEET NO.

A4.7

NOT USED	SCALE: 3"=1'-0"	12	NOT USED	SCALE: 1-$\frac{1}{2}$"=1'-0"	7	NOT USED	SCALE: 1/4"=1'-0"	6	MONUMENT SIGN ELEVATION	SCALE: 1/4"=1'-0"	3
NOT USED	SCALE: 3"=1'-0"	11	NOT USED	SCALE: 1-$\frac{1}{2}$"=1'-0"	7	NOT USED	SCALE: 1/4"=1'-0"	5	MONUMENT SIGN ELEVATION	SCALE: 1/4"=1'-0"	2
NOT USED	SCALE: 1 1/2"=1'-0"	10	NOT USED	SCALE: 1-$\frac{1}{2}$"=1'-0"	7	NOT USED	SCALE: 1/4"=1'-0"	4	MONUMENT SIGN PLAN	SCALE: 1/4"=1'-0"	1

3
-

2
-

TRACE
Design and Development
18301 Von Karman Ave. Suite 850
Irvine, CA 92612 TEL. 949-221-1183

CAPISTRANO COLLECTION

27184 ORTEGA HWY.
S. J. CAPISTRANO, CA. 92675

THIS DRAWING IS AN INSTRUMENT OF SERVICE, IS THE PROPERTY OF THE ARCHITECT AND MAY NOT BE REPRODUCED WITHOUT THE ARCHITECT'S PERMISSION AND UNLESS THE REPRODUCTION CARRIES THE ARCHITECT'S NAME. ALL DESIGN AND OTHER INFORMATION SHOWN ON THE DRAWING ARE FOR USE ON THE SPECIFIED PROJECT ONLY AND SHALL NOT BE USED OTHERWISE WITHOUT WRITTEN PERMISSION FROM THE ARCHITECT

CLIENT:

FORTUS
PROPERTY GROUP

NOTES:

MECHANICAL, ELECTRICAL, AND PLUMBING PERMITS TO BE PULLED SEPARATELY

APPROVALS:

KEY PLAN:

NO.	REVISION	DATE

SHEET TITLE

MONUMENT SIGN

JOB NO.	DATE	SCALE
201103	12.12.12	

SHEET NO.

A4.8

Finish Schedule

Room Name		Floor Mat.	Floor Fin.	Base Mat.	Base Fin.	Walls North Mat.	Walls North Fin.	Walls East Mat.	Walls East Fin.	Walls South Mat.	Walls South Fin.	Walls West Mat.	Walls West Fin.	Ceiling Mat.	Ceiling Fin.	Ceiling Height	Remarks
101–102	Tenant Space	–	–	–	–	GB	P–1	GB	P–1	GB	P–1	GB	P–1	–	–		NEW AREA TO MATCH EXISTING ADJACENT
A103	Tenant Space	–	–	–	–	GB	GB	GB	P–1	GB	P–1	GB	P–1	–	–		NEW AREA TO MATCH EXISTING ADJACENT
104	Tenant Space	–	–	–	–	GB	GB	GB	P–1	GB	P–1	GB	P–1	–	–		NEW AREA TO MATCH EXISTING ADJACENT
105	Tenant Space	–	–	–	–	WGB	WGB	WGB	P–1	WGB	P–1	GWB	P–1	–	–		NEW AREA TO MATCH EXISTING ADJACENT
106–107	Tenant Space	–	–	–	–	WGB	WGB	WGB	P–1	WGB	P–1	GWB	P–1	–	–		NEW AREA TO MATCH EXISTING ADJACENT
108	Tenant Space	–	–	–	–	WGB	WGB	WGB	P–1	WGB	P–1	GWB	P–1	–	–		NEW AREA TO MATCH EXISTING ADJACENT
109	Tenant Space	–	–	–	–	WGB	WGB	WGB	P–1	WGB	P–1	GWB	P–1	–	–		NEW AREA TO MATCH EXISTING ADJACENT

Door Schedule

Door No.	Door Size Width	Door Size Height	Door Size Thick	Type	Material	Finish	Label	Frame	Details Head	Details Jamb	Details Sill	Hardware No.	Remarks / Hardware
101	6'–0"	8'–0"	1 3/4"	B	AL	FF		AL	1 –	2 –	4 –		
102	3'–0"	8'–0"	1 3/4"	A	AL	FF		AL	1 –	2 –	4 –		
103	3'–0"	8'–0"	1 3/4"	A	AL	FF		AL	1 –	2 –	4 –		
104	3'–0"	8'–0"	1 3/4"	A	AL	FF		AL	1 –	2 –	4 –		
105	3'–0"	8'–0"	1 3/4"	A	AL	FF		AL	1 –	2 –	4 –		
106	3'–0"	8'–0"	1 3/4"	A	AL	FF		AL	1 –	2 –	4 –		
107	6'–0"	8'–0"	1 3/4"	B	AL	FF		AL	1 –	2 –	4 –		

Notes

Maximum flame spread classifications of all finish materials used on interior walls and ceilings shall not exceed class I in all enclosed stairs, corridors, and other exitways, and class II in all other rooms or areas per NFPA 101, Section 12-3.3.2.

Drapes and other decorative materials shall be flame retardant. Certification thereof shall be provided. Exits , exit lights, fire alarm stations, hose cabinets and extinguisher locations shall not be concealed by decorative material.

Rubber base supplier shall provide and install pre-moulded outside corners to match height

MIN. CLASS C FLAMESPREAD PER CBC TABLE 803.9 FOR NON-SPRINKLERED USE.

Floors per section 804.

All caulking exposed to view used next to door and window frames shall match color of wall, not frame.

Factory finished or factory primed items such as grilles, diffusers, metal trim access hatches, accessories, etc., shall be painted to match the adjacent surface and as directed by the Architect.

Contractor shall perform all cutting, patching, repairing, and restoring necessary to complete the work and to restore any damaged or affected surfaces resulting from the work of this contract to their original condition to the satisfaction of the Architect and to the owner.

AT1 - 2 X 4 Acoustic Tile/ T-Bar Grid
C - Concrete
CPT- Carpet
CB - Carpet Base
CT - Ceramic Tile
CV - Coved Sheet Vinyl Base
FF - Factory Finish

FRP- Fiber Reinforced Plastic
G - Glass
GLB - Glass Block
GB - Gypsum Board Taped, Spackle, Sanded Smooth
MC - Modular Carpet
M - "Marlite" PVC Wainscot
NWSF-New Wood Sub-Floor

PL -Plastic
PR -Pair of Doors
P-1 -Painted
P-2 -Primer Ready For Finish
RB -Rubber Base
RT -Resilient Vinyl Comp. Tile
SCV -Self Coved Vinyl Base

SLT -Self-Leveling Topping
SV -Sheet Vinyl/Seamless
S -Stone
VCT -VCT- Armstrong Exceleon
VT - Vinyl Topset
W - Wood
WC -Wall Covering
WDB -Wood Base
WGB -Water Resistant Gyp. Board

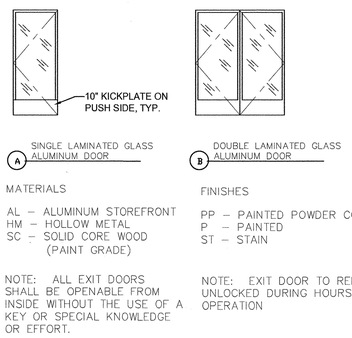

Door Notes

1. Door height dimensions are from the floor line to frame opening exclusive of thresholds and clearance unless noted otherwise.
2. Hand activated door opening hardware shall be centered between 30 inches and 44 inches above the floor. Latching and locking doors that are hand activated and which are in a path of travel, shall be operable with a single effort by lever type hardware, by panic bars, push-pull activating bars or other hardware designed to provide passage without requiring the ability to grasp the opening hardware per Section 1133B.2.1.2
3. Single effort maximum pressure required to open doors:
   Interior Doors - 5 pounds
   Exterior Doors - 5 pounds
   Fire Doors - 15 pounds
4. Door and frame assemblies at 1 hour exit corridors if required shall be UL list and shall have a closer and approved gasket material so installed to provide the door meets the stop on both sides and the top (UBC STDS. 43.210)
5. Door and frame finishes shall be as indicated on finish schedule.
6. All vision panels in rated doors if provided, shall be 1/4" clear wired glass in approved steel frame, size as indicated.
7. All rated doors shall be positive latching.
8. "Label" shall mean 'assembly' as defined in International Building Code
9. Manufacturers installation instructions shall be available on the job site for all rated door assemblies.
10. Wood doors shall be solid core with 3-ply wood cross banding, faced and edge band per door schedule. Provide fire rated doors where required. All doors shall be "custom grade" quality, Weyerhauser or equal. Factory refit doors to frames where specified.
11. Hollow metal frames shall be fabricated from 16 GA. steel miter and weld corner, mortice and reinforce for hardware. Provide 14 GA. floor clips and 14 GA. fixed or adjustable jamb/head anchors at 24"O.C. maximum. Provide UL labels where required. Shop coat with baked inhabitive primer.
12. Install fire rated doors in corresponding fire-rated frames in accordance with the requirements of NFPA standard no. 80. Provide clearance complying with the limitations of the authority having jurisdiction.
13. Fire-rated door assemblies may not be field cut.
14. All exit doors shall be operable from the inside without th use of a key or any special knowledge or effort.
15. All rated doors shall be equipped with smoke seal devices typical.
16. All Doors get floor stops.
17. Provide floor mounted door stops for all doors.

SCALE: 3"=1'-0" (5)

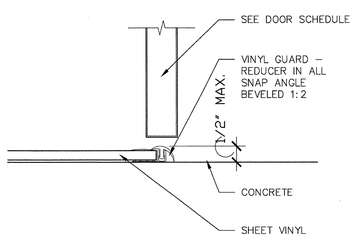

DOOR SILL — SCALE: 3"=1'-0" (4)

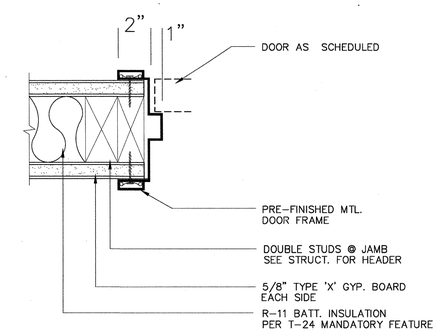

TYP. DOOR JAMB/HEADER — SCALE: 3"=1'-0" (3)

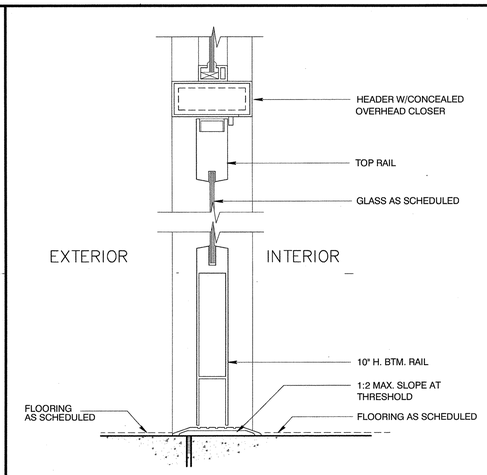

STOREFRONT DOOR SECTION — SCALE: 3"=1'-0" (2)

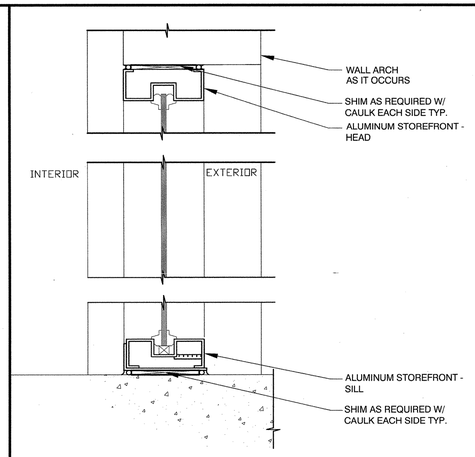

STOREFRONT SECTION (1)

TRACE
Design and Development
18301 Von Karman Ave. Suite 850
Irvine, CA 92612 TEL. 949–221–1183

CAPISTRANO COLLECTION

27184 ORTEGA HWY.
S. J. CAPISTRANO, CA. 92675

THIS DRAWING IS AN INSTRUMENT OF SERVICE, IS THE PROPERTY OF THE ARCHITECT AND MAY NOT BE REPRODUCED WITHOUT THE ARCHITECT'S PERMISSION AND UNLESS THE REPRODUCTION CARRIES THE ARCHITECT'S NAME. ALL DESIGN AND OTHER INFORMATION SHOWN ON THE DRAWING ARE FOR USE ON THE SPECIFIED PROJECT ONLY AND SHALL NOT BE USED OTHERWISE WITHOUT WRITTEN PERMISSION FROM THE ARCHITECT

CLIENT:

FORTUS PROPERTY GROUP

NOTES:

MECHANICAL, ELECTRICAL, AND PLUMBING PERMITS TO BE PULLED SEPARATELY

APPROVALS:

KEY PLAN:

NO.	REVISION	DATE

SHEET TITLE

DOOR & FINISH SCHEDULE

JOB NO.	DATE	SCALE
201193	12.12.12	VARIES

SHEET NO.

A-6.0