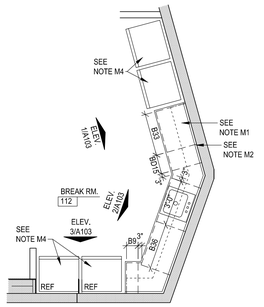

PARTIAL FLOOR PLAN

SCALE : 1/4" = 1'-0"

MILLWORK NOTES

M1. BASE AND WALL CABINETS.
M2. 1 1/2" PART. BD. COUNTERTOP W/ NO DRIP WATERFALL EDGE; COVED BACKSPASH AND SIDESPLASHES W/ WATERFALL / SCRIBE TOP; FIN. W/ PLASTIC LAMINATE.
M3. NEW RUBBER BASE.
M4. OWNER SHALL PROVIDE REFRIGERATOR, MICROWAVE OVEN AND VENDING MACHINES. (NOT IN CONTRACT)
M5. SINK FRONTS SHALL HAVE INTEGRATED TO KICKS, TAPE AND SPACKLE GYP. BD. BEHIND SINK FRONT. INSTALL WALL AND FLOOR FINISHES BEHIND SINK FRONT.
M6. CABINET TO BE USED AS UTILITY CABINET FOR WATER HEATER AND EJECTION PUMP. SEE PLUMBING DRAWINGS. MODIFY SIZE OF CABINET DOORS TO ACCOUNT FOR ADJACENT "ANGLED" FILLER PIECE.

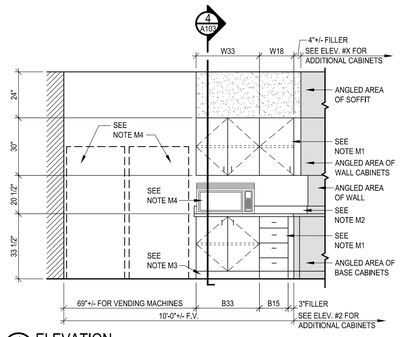

1 A103 ELEVATION
SCALE : 3/8" = 1'-0"

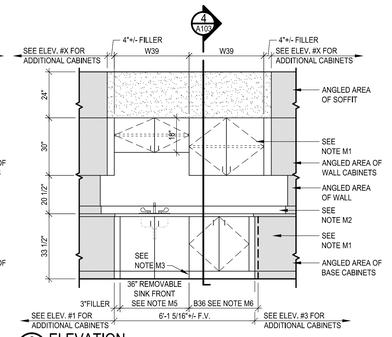

2 A103 ELEVATION
SCALE : 3/8" = 1'-0"

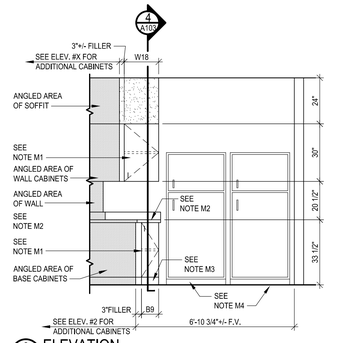

3 A103 ELEVATION
SCALE : 3/8" = 1'-0"

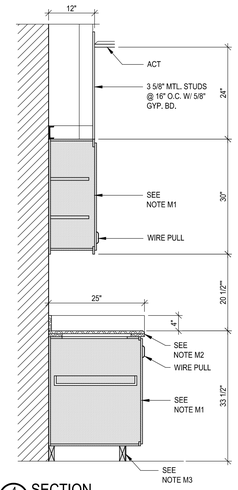

4 A103 SECTION
SCALE : 3/4" = 1'-0"

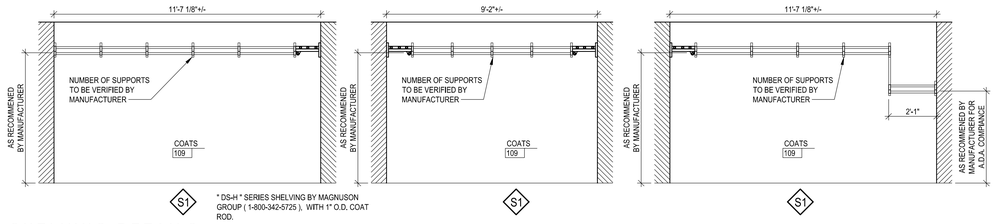

* DS-H * SERIES SHELVING BY MAGNUSON GROUP (1-800-342-5725), WITH 1" O.D. COAT ROD.

SHELVING DETAILS

SCALE : 3/8" = 1'-0"

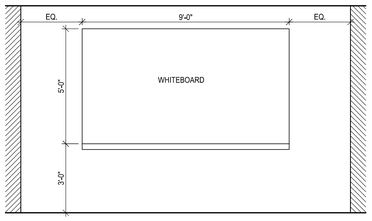

5 A103 ELEVATION
SCALE : 3/8" = 1'-0"

Available Space
+/- 3,200 USF
+/- 3,493 RSF

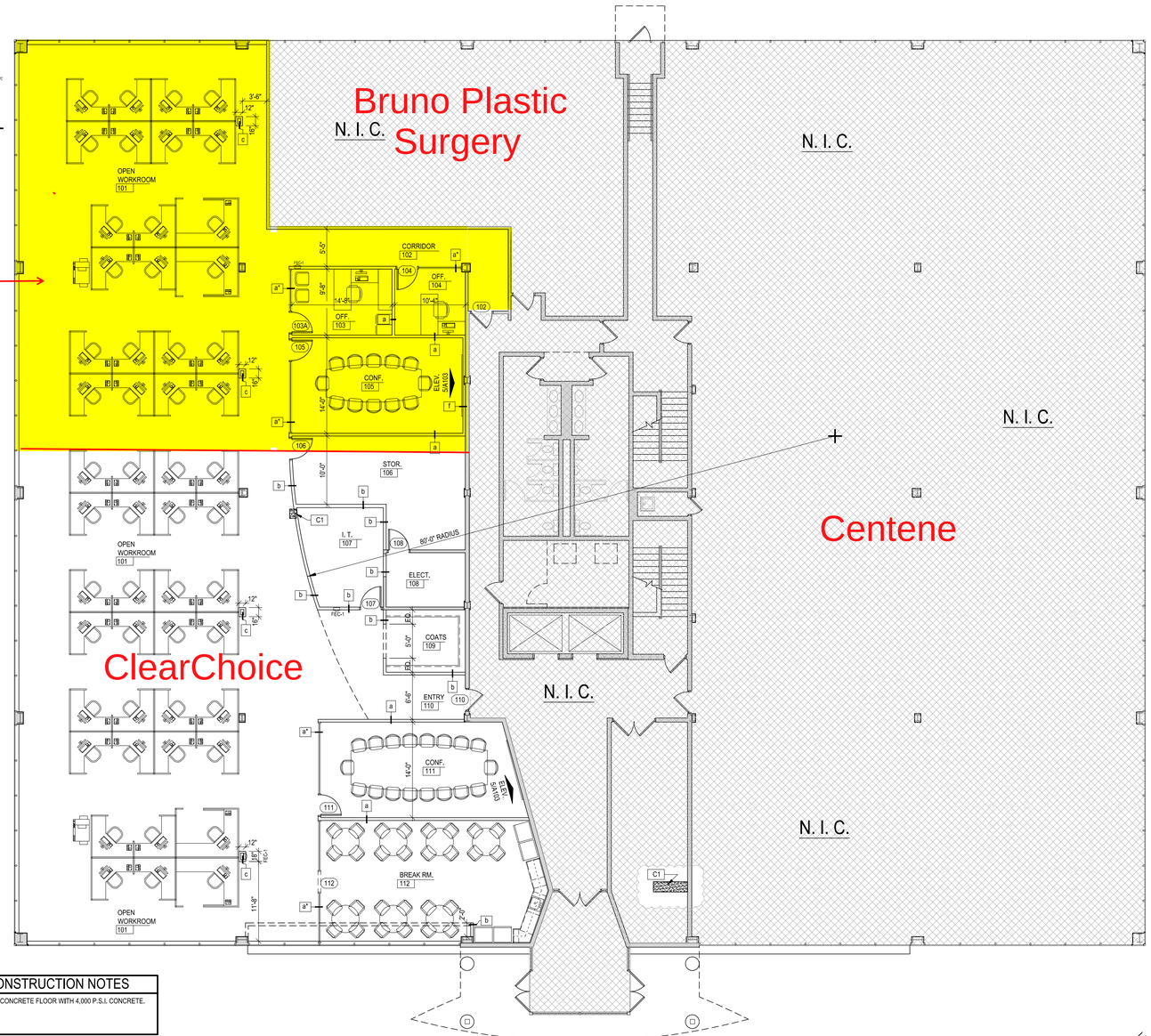

CONSTRUCTION NOTES

C1. PATCH CONCRETE FLOOR WITH 4,000 P.S.I. CONCRETE.

BUILDING 50 - FIRST FLOOR PLAN

SCALE : 1/8" = 1'-0"

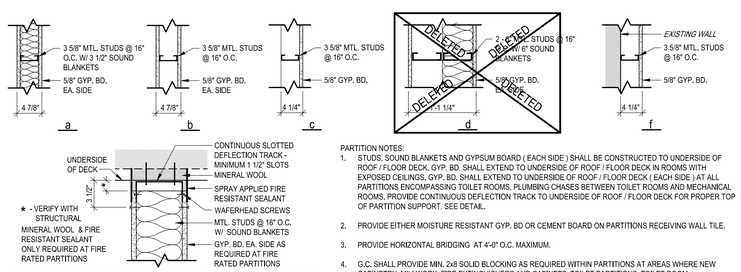

DEFLECTION TRACK DETAIL FOR NON-BEARING PARTITIONS
NO SCALE

PARTITION NOTES:

1. STUDS, SOUND BLANKETS AND GYPSUM BOARD (EACH SIDE) SHALL BE CONSTRUCTED TO UNDERSIDE OF ROOF / FLOOR DECK, GYP. BD. SHALL EXTEND TO UNDERSIDE OF ROOF / FLOOR DECK IN ROOMS WITH EXPOSED CEILINGS, GYP. BD. SHALL EXTEND TO UNDERSIDE OF ROOF / FLOOR DECK (EACH SIDE) AT ALL PARTITIONS ENCOMPASSING TOILET ROOMS, PLUMBING CHASES BETWEEN TOILET ROOMS AND MECHANICAL ROOMS, PROVIDE CONTINUOUS DEFLECTION TRACK TO UNDERSIDE OF ROOF / FLOOR DECK FOR PROPER TOP OF PARTITION SUPPORT. SEE DETAIL.
2. PROVIDE EITHER MOISTURE RESISTANT GYP. BD OR CEMENT BOARD ON PARTITIONS RECEIVING WALL TILE.
3. PROVIDE HORIZONTAL BRIDGING AT 4'-0" O.C. MAXIMUM.
4. G.C. SHALL PROVIDE MIN. 2x6 SOLID BLOCKING AS REQUIRED WITHIN PARTITIONS AT AREAS WHERE NEW CABINETRY, MILLWORK, FIRE EXTINGUISHERS AND CABINETS, TOILET PARTITIONS, TOILET ROOM ACCESSORIES, CHAIR RAILS, HANDRAILS, AND ALL WALL APPURTENANCES ARE TO BE INSTALLED.

PARTITION TYPES

X — X* — ASTERISK DENOTES WALL TYPE ABOVE GLASS

SCALE : 1" = 1'-0"

P:\2014\0521\004\A - DRAWINGS & MODELS\01 - CAD\01 - PLAN SHEETS (ONLY SHEETS IN SET)\02 - ARCH\A-103 FIRST FLOOR PLAN.DWG

Borton Lawson
ENGINEERING
ARCHITECTURE
www.borton-lawson.com
Northeast Pennsylvania
613 Baltimore Drive
Suite 300
Wilkes-Barre, PA 18702-7903
Voice: 570-821-1999
Fax: 570-821-1990
Lehigh Valley
State College
Pittsburgh

SEALS

REVISIONS

NO.	DATE	DESCRIPTION

DRAWING TITLE & PROJECT NAME

BLDG 50 - FIRST FLOOR PLAN, ELEV'S & DTL'S

RENOVATIONS TO 50 AND 54 GLENMAURA
OFFICE SPACE - SANOFI PASTEUR - VAXSERVE
GLENMAURA NATIONAL BLVD, MOOSIC PA 18504

DRAWN BY	RFM
CHECKED BY	LJG
DATE	3/21/2014
PROJECT NO.	2014-0521-004
PROJECT STATUS	CONSTRUCTION DOCUMENTS
DRAWING NO.	A-103