7 TOILET #35 - ELEVATION A
3/8" = 1'-0"

8 TOILET #35 - ELEVATION B
3/8" = 1'-0"

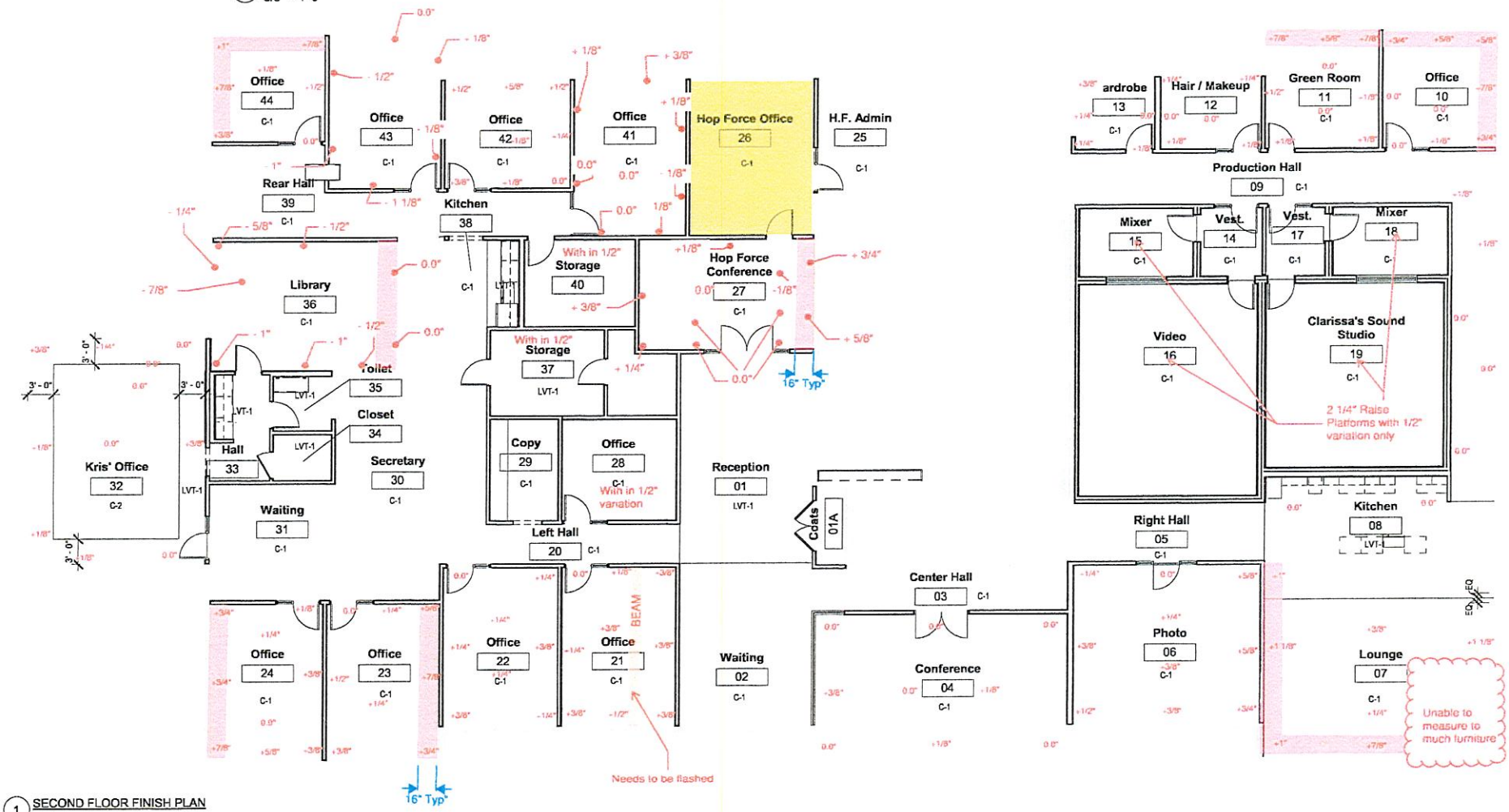

1 SECOND FLOOR FINISH PLAN
1/8" = 1'-0"