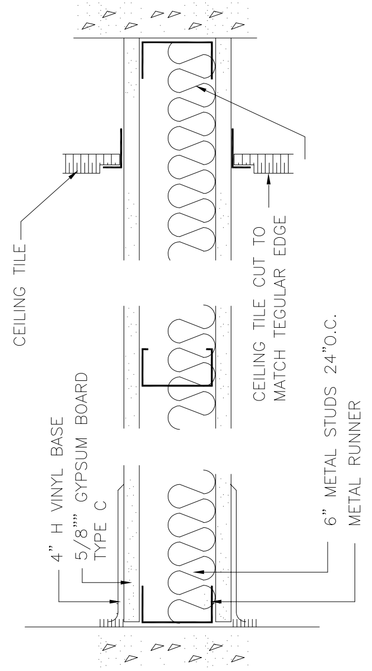

PARTITION TYPE #1

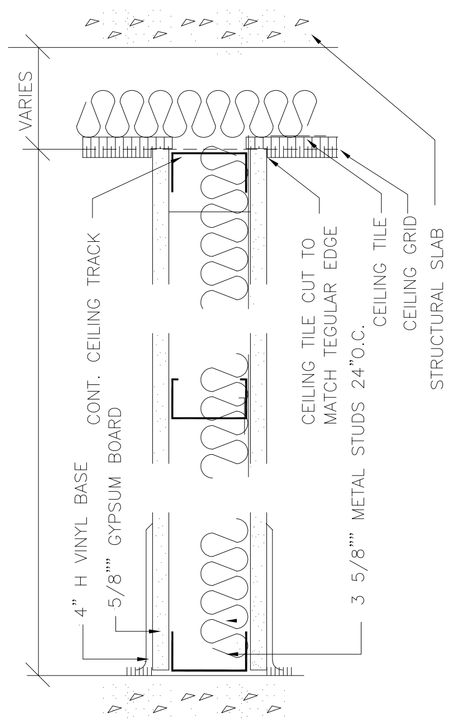

PARTITION TYPE #2

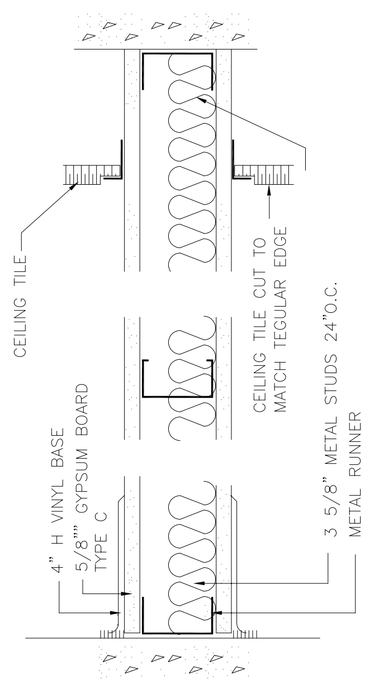

PARTITION TYPE #3
PARTITION TYPE #4 - 2 1/2" STUD
ONE SIDE DRYWALL

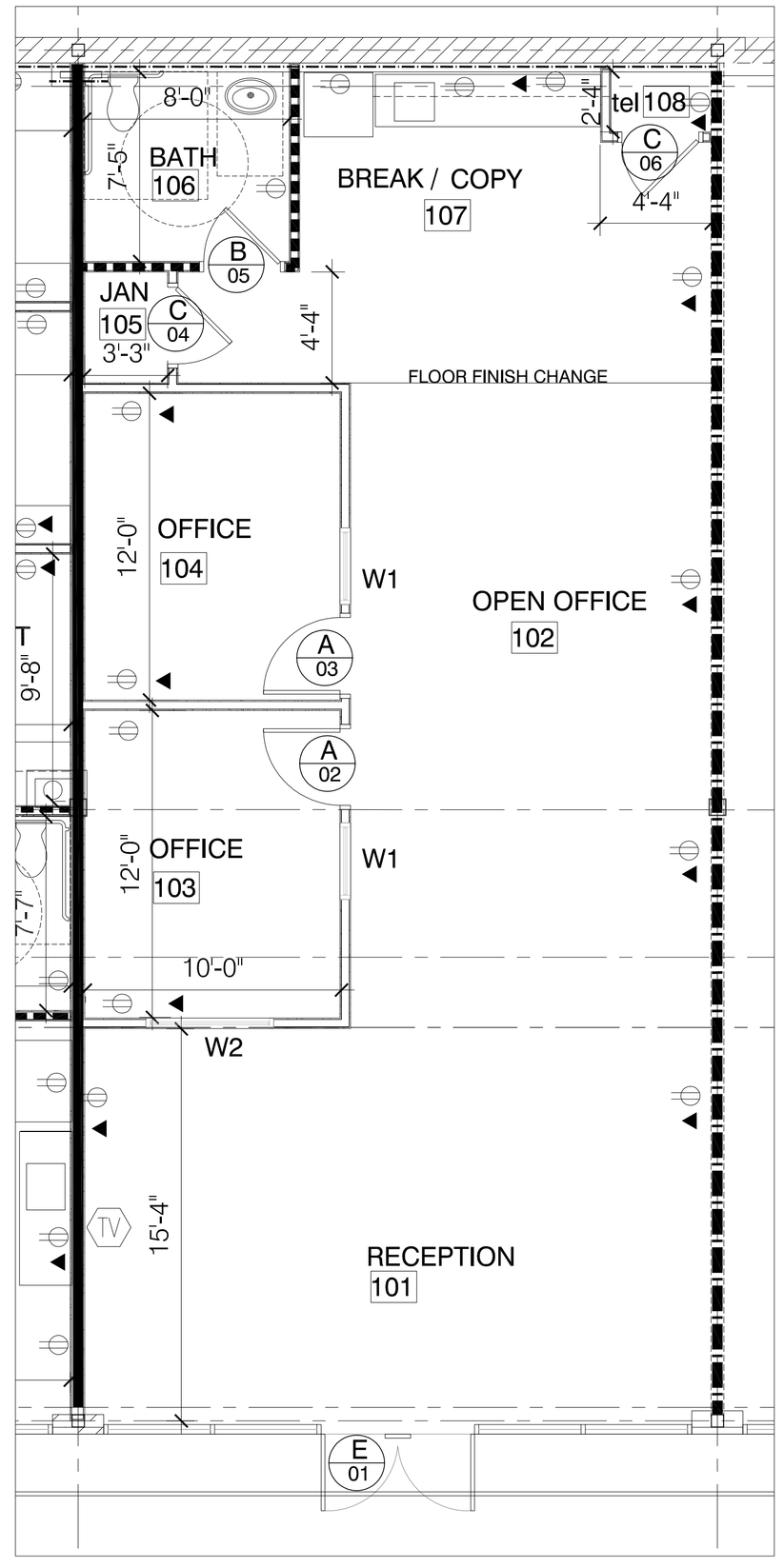

1 FIRST FLOOR PLAN - NEW WORK
1/4" = 1'-0"

EXISTING BASE BUILDING EXTERIOR WALLS
EXISTING DEMISING PARTITION P-1
NEW DEMISING PARTITION P-1
NEW TENANT PARTITION P-2
NEW TENANT BATHROOM PARTITION P-3
NEW TENANT FURRING PARTITION P-4
W1 SIDELIGHTS & CLEARSTORY (SEE 1.C.1)

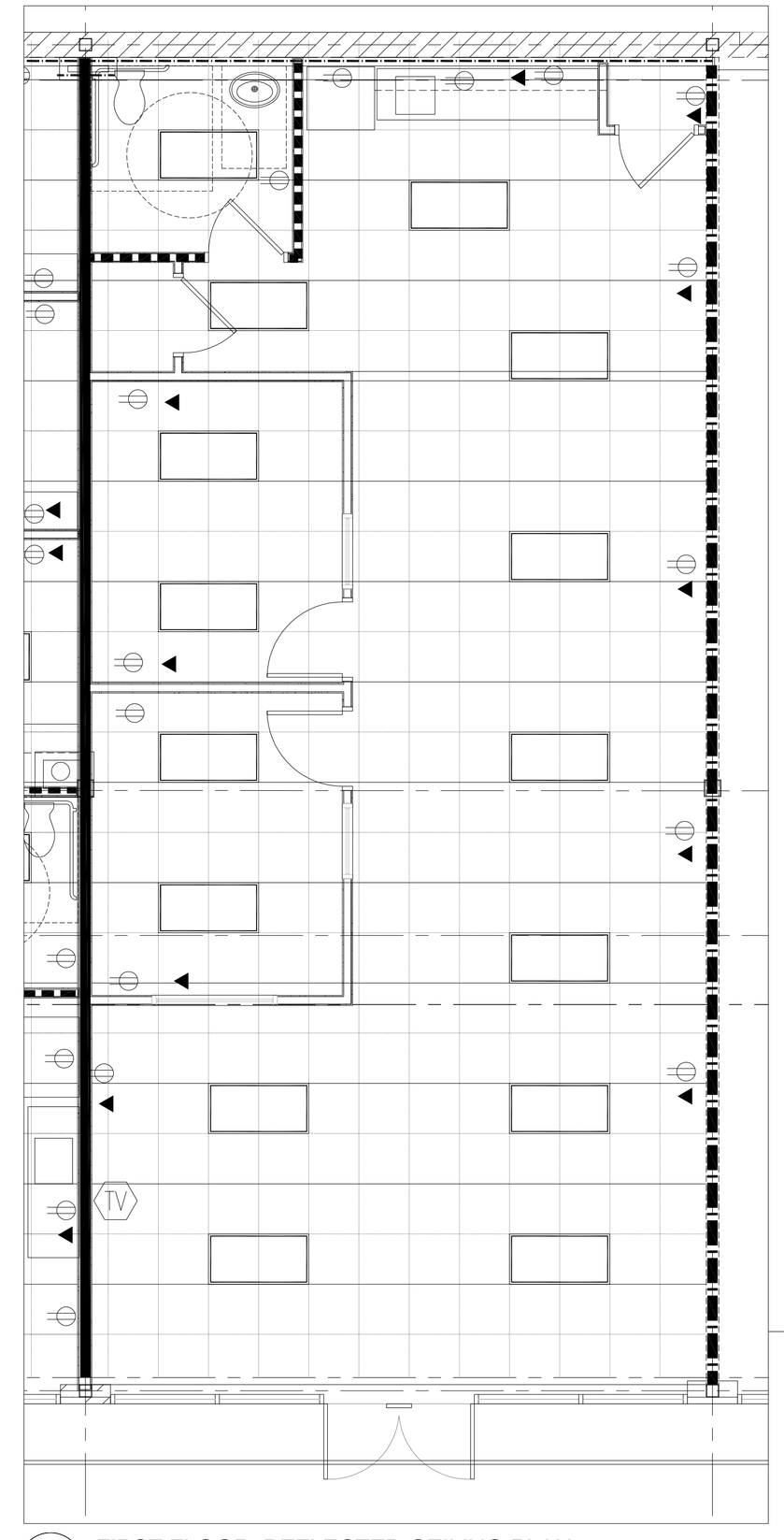

1 FIRST FLOOR REFLECTED CEILING PLAN
1/4" = 1'-0"

2' X 4' BASE BUILDING LIGHTS IN SUSPENDED 2' X 2' ACOUSTICAL CEILING

CONSTRUCTION NOTES
1. ALL CABINETS & COUNTERTOPS TO BE FORMICA P.LAM , ALL SHELVES TO BE MELAMINE. ALL UPPER CABINETS TO BE 12" DEEP, ALL LOWER CABINETS TO BE 24" DEEP WITH THE EXCEPTION OF EXAM ROOMS WHICH WILL BE TO BE 18" DEEP
2. ALL UPPER & LOWER CABINETS TO HAVE ONE ADJUSTABLE SHELF EACH, ALL COUNTERTOP FRONT LIPS TO BE 1 1/2" , ALL KICKS TO BE 4" HIGH, BACKSPLASH WHERE SHOWN TO BE 2" HIGH,
3. ALL UPPER CABINETS TO BE SUPPORTED ON WOOD BLOCKING IN PARTITIONS, ALL HANDLES TO BE 4" ALUM. WIRE TYPE
4. ALL CABINET HINGES TO BE CONCEALED TYPE , ALL DRAWER SLIDES TO BE METAL TYPE

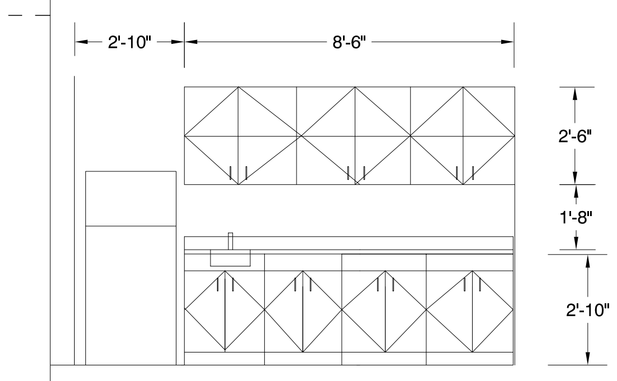

CABINETS TO BE P.LAM. W/ 4" ALUM. PULLS
SHELVES TO BE ADJUSTABLE IN UPPER & LOWER CABINETS. UPPER CABS. TO BE 12" DEEP ON FRT WOOD BLOCKING IN STUD WALLS
LOWER CABS . TO BE 24" DEEP

SEE PLUMBING DWGS. FOR SINK INFO.

REFRIGERATOR GE

4 BREAK ROOM CABINETS
1/4" = 1'-0"

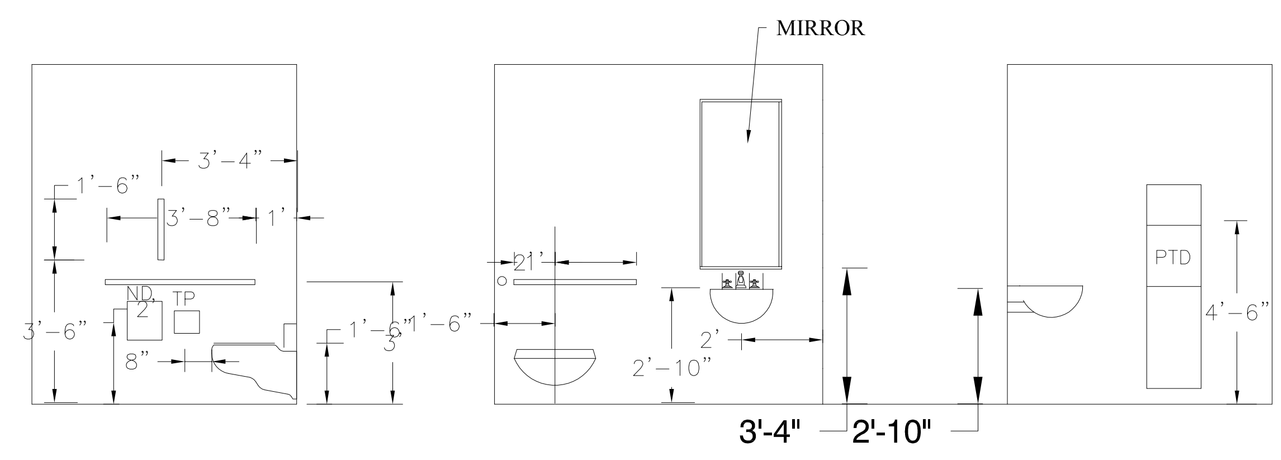

3 BATHROOM FIXTURES & MOUNTING HEIGHTS
1/4" = 1'-0"

TPD TOILET PAPER DISPENSER -BOBRICK B 386
PTD PAPER TOWEL DISPENSER - BOBRICK B 3803
SND SANITARY NAPKIN DISPOSAL
MIRROR WITH S.S. EDGE FRAME
S.S. GRAB BARS ON WOOD BLOCKING

BARRY DUNN A.I.A.

Architecture
Interior Design
Planning

715 TIMBER BRANCH DRIVE
ALEXANDRIA, VIRGINIA 22302

TEL (703) 622 7196
EMAIL. barry@bdaoffice.com

CONSULTANT

THE LANDING AT CANNON BRANCH
10650 GATEWAY BOULEVARD SUITE 120
MANASSAS , VIRGINIA

A TENANT BUILDOUT FOR BUCHANAN PARTNERS

JOB TITLE

REVISION:

COMMONWEALTH OF VIRGINIA
30 Aug 2021
BARRY DUNN
No. 4861
ARCHITECT

REGISTRATION

DATE 12 NOV 2021
SCALE
DRAWN BY
APPROVED BY

FIRST FLOOR PLAN
NEW WORK
REFLECTED CEILING
BUILT INS

SHEET TITLE

1.A.1

SHEET NUMBER